Multistage Horizontal High-pressure Centrifugal Pump

# Movitec H(S)I

## Type Series Booklet

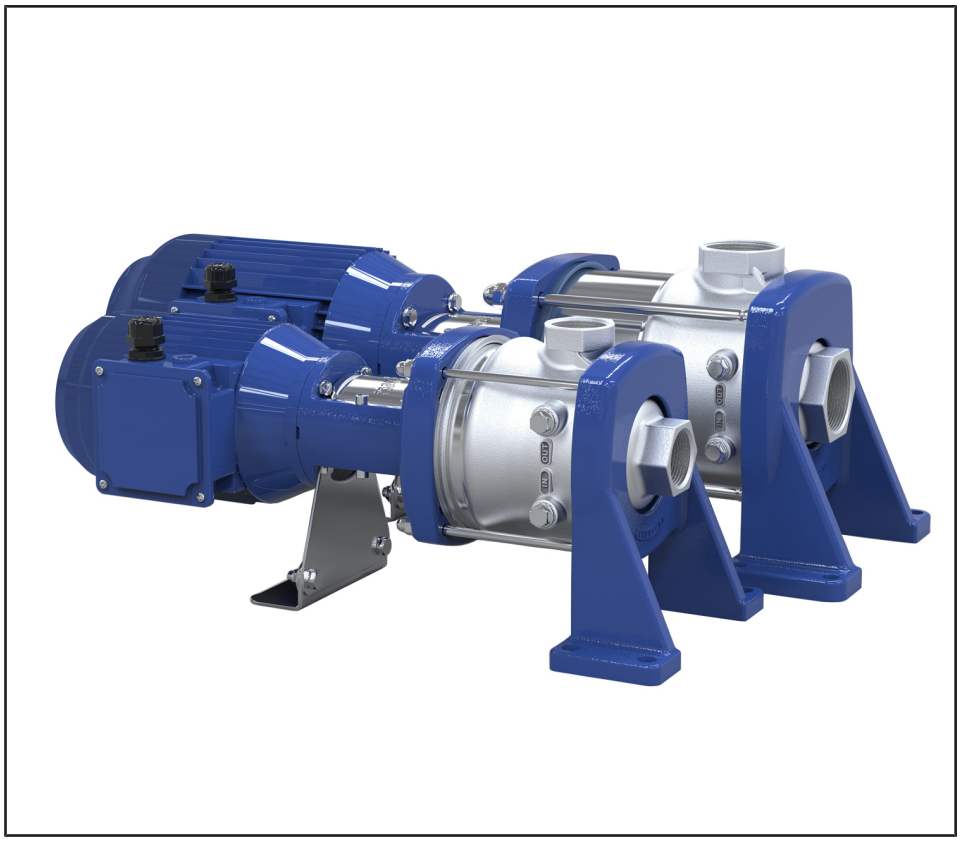

## Legal information/Copyright

Type Series Booklet Movitec H(S)I

All rights reserved. The contents provided herein must neither be distributed, copied, reproduced, edited or processed for any other purpose, nor otherwise transmitted, published or made available to a third party without the manufacturer's express written consent.

Subject to technical modification without prior notice.

© KSB Aktiengesellschaft, Frankenthal 13/03/2018

# Contents

**High-pressure Pumps** ..... **5**
Multistage Horizontal High-pressure Centrifugal Pump ..... 5
Movitec H(S)I ..... 5
Main applications ..... 5
Fluids handled ..... 5
Operating data ..... 5
Design details ..... 5
Designation ..... 6
Materials ..... 7
Coating and preservation ..... 7
Product benefits ..... 8
Acceptance tests and warranty ..... 8
Selection Information ..... 8
Impeller for lower NPSH values ..... 8
Information about the characteristic curve ..... 10
Fluid handled ..... 10
Minimum flow rate and maximum flow rate ..... 10
Overview of product features / selection tables ..... 11
Table of fluids handled ..... 11
Shaft seal ..... 14
Pressure limits and temperature limits ..... 14
Technical data ..... 15
Motors ..... 15
Selection chart ..... 17
Movitec H(S)I, n = 2900 rpm ..... 17
Movitec H(S)I, n = 1450 rpm ..... 18
Movitec H(S)I, n = 3500 rpm ..... 19
Movitec H(S)I, n = 1750 rpm ..... 20
Characteristic curves ..... 21
n = 2900 rpm ..... 21
Movitec H(S)I, 2B, n = 2900 rpm ..... 21
Movitec H(S)I, 2-LB, n = 2900 rpm ..... 22
Movitec H(S)I, 4B, n = 2900 rpm ..... 23
Movitec H(S)I, 4-LB, n = 2900 rpm ..... 24
Movitec H(S)I, 6B, n = 2900 rpm ..... 25
Movitec H(S)I, 6-LB, n = 2900 rpm ..... 26
Movitec H(S)I, 10B, n = 2900 rpm ..... 27
Movitec H(S)I, 10-LB, n = 2900 rpm ..... 28
Movitec H(S)I, 15B, n = 2900 rpm ..... 29
Movitec H(S)I, 15-LB, n = 2900 rpm ..... 30
n = 1450 rpm ..... 31
Movitec H(S)I, 10B, n = 1450 rpm ..... 31
Movitec H(S)I, 10-LB, n = 1450 rpm ..... 32
Movitec H(S)I, 15B, n = 1450 rpm ..... 33
Movitec H(S)I, 15-LB, n = 1450 rpm ..... 34
n = 3500 rpm ..... 35
Movitec H(S)I, 2B, n = 3500 rpm ..... 35
Movitec H(S)I, 2-LB, n = 3500 rpm ..... 36
Movitec H(S)I, 4B, n = 3500 rpm ..... 37
Movitec H(S)I, 4-LB, n = 3500 rpm ..... 38
Movitec H(S)I, 6B, n = 3500 rpm ..... 39
Movitec H(S)I, 6-LB, n = 3500 rpm ..... 40
Movitec H(S)I, 10B, n = 3500 rpm ..... 41
Movitec H(S)I, 10-LB, n = 3500 rpm ..... 42
Movitec H(S)I, 15B, n = 3500 rpm ..... 43
Movitec H(S)I, 15-LB, n = 3500 rpm ..... 44
n = 1750 rpm ..... 45
Movitec H(S)I, 10B, n = 1750 rpm ..... 45
Movitec H(S)I, 10-LB, n = 1750 rpm ..... 46
Movitec H(S)I, 15B, n = 1750 rpm ..... 47
Movitec H(S)I, 15-LB, n = 1750 rpm ..... 48
Installation types ..... 49
Dimensions and connections ..... 50

Movitec H(S)I 2B, n = 2900 rpm ..... 50
Movitec H(S)I 2B, n = 3500 rpm ..... 51
Movitec H(S)I 4B, n = 2900 rpm ..... 52
Movitec H(S)I 4B, n = 3500 rpm ..... 53
Movitec H(S)I 6B, n = 2900 rpm ..... 54
Movitec H(S)I 6B, n = 3500 rpm ..... 55
Movitec H(S)I 10B, n = 1450 rpm ..... 56
Movitec H(S)I 10B, n = 1750 rpm ..... 57
Movitec H(S)I 10B, n = 2900 rpm ..... 58
Movitec H(S)I 10B, n = 3500 rpm ..... 59
Movitec H(S)I 15B, n = 1450 rpm ..... 60
Movitec H(S)I 15B, n = 1750 rpm ..... 61
Movitec H(S)I 15B, n = 2900 rpm ..... 62
Movitec H(S)I 15B, n = 3500 rpm ..... 63
General assembly drawing with list of components ..... 64
Movitec H(S)I ..... 64

# High-pressure Pumps

## Multistage Horizontal High-pressure Centrifugal Pump

# Movitec H(S)I

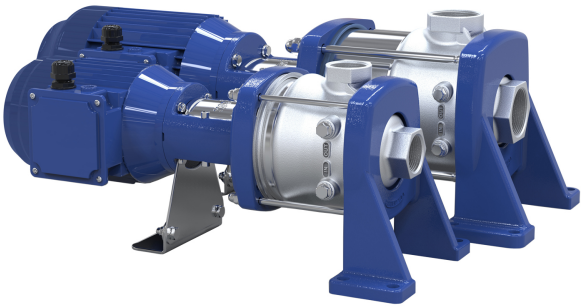

### Main applications

- Spray irrigation systems
- General irrigation systems
- Washing plants
- Fire-fighting systems
- Pressure boosting
- Industrial plants
- Water supply systems
- Heating, ventilation and air-conditioning systems
- Marine applications

### Fluids handled

- High-temperature hot water
- Clear water
- Condensate
- Cooling water
- Fire-fighting water
- Oil
- Cleaning agents
- And others

### Operating data

Operating properties

| Characteristic | | Value |
|---|---|---|
| Flow rate | Q [m³/h] | ≤ 26,3 |
| Head | H [m] | ≤ 195 |
| Fluid temperature | T [°C] | ≥ -20 |
| | | ≤ +140 |
| Operating pressure | p [bar] | ≤ 25 |

### Design details

### Design

- High-pressure Pump
- Maximum pressure class PN 25
- Centrifugal pump
- Single-stage or multistage

### Installation

- Horizontal installation

### Drive

- Surface-cooled KSB squirrel-cage motor
- Thermal class F to IEC 34-1
- Efficiency class IE3 to IEC 60034-30 (≥ 0.75 kW)
- Enclosure IP55
- Frequency 50 Hz/60 Hz

Optional:

- Harting connector, type HAN 10E

### Shaft seal

- Uncooled maintenance-free mechanical seal
  - Fixed mechanical seal
  - Easy Access mechanical seal
  - Cartridge mechanical seal

### Bearings

- Tungsten carbide plain bearings at the hydraulic rotor

## Designation

Designation example

| Position | | | | | | | | | | | | | | | | | | | | | | | | | | | | | |
|---|---|---|---|---|---|---|---|---|---|---|---|---|---|---|---|---|---|---|---|---|---|---|---|---|---|---|---|---|---|
| 1 | 2 | 3 | 4 | 5 | 6 | 7 | 8 | 9 | 10 | 11 | 12 | 13 | 14 | 15 | 16 | 17 | 18 | 19 | 20 | 21 | 22 | 23 | 24 | 25 | 26 | 27 | 28 | 29 | 30 | 31 | 32 |
| M | o | v | i | t | e | c | H | S | I | 0 | 1 | 5 | / | 0 | 4 | - | B | 4 | S | 1 | 3 | E | S | 1 | 1 | 2 | B | 7 | U | A | X |
| See name plate and data sheet | | | | | | | | | | | | | | | | | | See data sheet | | | | | | | | | | | | | |

Designation key

| Position | Code | Description | |
|---|---|---|---|
| 1-7 | Pump type | | |
| | Movitec | Movitec | |
| 8-9 | Design | | |
| | H | Cast steel | 1.4308 |
| | HS | Cast steel | 1.4408 |
| 10 | Connection type | | |
| | I | Internal thread | |
| 11-13 | Size | | |
| | 002 | 2 | |
| | ... | ... | |
| | 015 | 15 | |
| 15-16 | Number of stages | | |
| | 01 | 1 | |
| | ... | ... | |
| | 14 | 14 | |
| 17 | Number of stages with special impeller | | |
| | -[1)] | No stage with a special impeller | |
| | L | First stage with a special impeller for lower NPSH values | |
| 18 | Product generation | | |
| | B | Movitec from 2010 | |
| 19 | Connection standard | | |
| | 4 | Internal thread | EN ISO 228-1 |
| 20 | Material variant | | |
| | S | Cast steel | 1.4408 - 1.4408 - EN-GJS-400-15 |
| 21-22 | Seal code | | |
| | 13 | Q1BEGG | |
| | 14 | Q1BVGG | |
| | 15 | U3U3X4GG | |
| | 16 | U3U3VGG | |
| | 18 | U3BEGG | |
| | 23 | Q1BEGG | |
| | 24 | Q1Q1VGG | |
| | 28 | Q1Q1X4GG | |
| | 29 | Q1Q1EGG | |
| 23 | Mechanical seal design | | |
| | F | Fixed mechanical seal | |
| | E | Easy Access mechanical seal | |
| | C | Cartridge mechanical seal | |
| 24 | Drive | | |
| | 0 | Without motor | |
| | 2 | With PumpDrive 2 | |
| | E | With PumpDrive 2 Eco | |
| | S | Standard IEC | |
| 25-27 | Motor size | | |
| | 071 | IEC 071 | |
| | 080 | IEC 080 | |
| | 090 | IEC 090 | |
| | 100 | IEC 100 | |
| | 112 | IEC 112 | |

1) Blank

| Position | Code | Description |
|---|---|---|
| 25-27 | 132 | IEC 132 |
| 28 | Pressure class | |
| | A | PN16 / PN25 |
| | B | PN25 |
| 29 | Number of motor poles | |
| | 5 | 50 Hz, 2 poles |
| | 6 | 60 Hz, 2 poles |
| | 7 | 50 Hz, 4 poles |
| | 8 | 60 Hz, 4 poles |
| 30 | Motor specification | |
| | M | 230 V, single-phase AC motor |
| | O | 0.37/0.55 [kW], without IE classification |
| | U | 230/400 V - IE3 |
| | V | 400/690 V - IE3 |
| | W | 230/400 V - IE4/IE5 (KSB SuPremE) |
| | X | 400/690 V - IE4/IE5 (KSB SuPremE) |
| 31 | PumpMeter | |
| | A | Mit PumpMeter |
| | W | Without PumpMeter |
| 32 | Design | |
| | -[1)] | Standard |
| | X | Non-standard (BT3D, BT3) |

## Materials

Overview of materials depending on the design

| Part No. | Description | Design | |
|---|---|---|---|
| | | H | HS |
| 10-6 | Pump shroud | 1.4301 | 1.4404 |
| 101 | Pump casing | 1.4408 | 1.4408 |
| 108 | Stage casing | 1.4301 | 1.4404 |
| 160 | Discharge cover | 1.4301 | 1.4404 |
| 210 | Shaft | 1.4057 | 1.4460 |
| 230 | Impeller | 1.4301 | 1.4404 |
| 341 | Drive lantern | EN-GJL-250[2)] / EN-GJS-400-15[3)] | |
| 412 | O-ring | EPDM-WRc / ACS | FPM / HNBR |
| 525 | Spacer sleeve | 1.4301 | 1.4401 |
| 529 | Bearing sleeve | Tungsten carbide / aluminium oxide | |
| 89-11 | Retaining bracket | 1.4301 | |
| 890 | Baseplate | EN-GJS-400-15 | |
| 905 | Tie bolt | 1.4057 | |
| 920 | Nut | 1.4301 | 1.4404 |
| 932 | Circlip | 1.4571 | |

Comparison of materials

| EN | ASTM |
|---|---|
| EN-GJL-250 | A48 Class 35 B |
| EN-GJS-400-15 | A536 Grade 60-40-18 |
| 1.4057 | SS 431 |
| 1.4301 | SS 304 |
| 1.4308 | Grade CF8 |
| 1.4404 | SS 316L |
| 1.4408 | Grade CF8M |
| 1.4460 | SS 329 |
| 1.4571 | SS 316Ti |

## Coating and preservation

Coating of pump components

| Component | Coating |
|---|---|
| Drive lantern | Cataphoretic coating |
| Pump foot | Powder coating |

2) H(S)I 2B, 4B, 6B, 10B, 15B, (≤ 4 kW)
3) H(S)I 2B, 4B, 6B, 10B, 15B (≥ 5.5 kW)

## Product benefits

- Reliable: product-lubricated plain bearings made of tungsten carbide, cast pump foot, torsion-resistant pump shroud and confined O-rings
- Long service life: corrosion-resistant hydraulic components made of stainless steel
- Easy to service: can be fitted with any standardised mechanical seal (to EN 12756)
- Easy to install underneath other machinery due to horizontal installation

## Acceptance tests and warranty

- Pressure test
  - to EN 809
- Leak test
  - with water
- Materials testing
  - Certificate of compliance with the order (corresponds to EN 10204)
    In the certificate of compliance with the order the manufacturer confirms by way of an informal report without specifying test results that the delivery complies with the stipulations of the purchase order.
  - Test report 2.2 on request
- Final inspection
  - Inspection certificate 3.1 to EN 10204 on request
- Hydraulic test

  The duty point of each pump is guaranteed to ISO 9906:2012 Grade 3B.
  This test is always carried out using the original motor.
  The NPSH and the suction lift are not measured (3.2 certificate available).
- Warranties
  Warranties are given within the scope of the valid terms and conditions of sale and delivery.

## Selection Information

### Impeller for lower NPSH values

An impeller for lower NPSH values is available for sizes 2, 4, 6, 10 and 15.

This type of impeller ensures that the pump's NPSH curve is significantly improved.

The solution is based on a newly developed impeller for lower NPSH values and a modified stage casing.
Cavitation inside the pump can hence be prevented in the case of critical inlet conditions.

**Risks of cavitation:**

- Reduced lifetime of the pump due to damaged parts and unbalanced hydraulic system
- Excessive wear of pump parts or motor bearings
- Insufficient cooling and/or lubrication of the mechanical seal and pump bearing

**Benefits of using impellers for lower NPSH values:**

- More suitable in critical inlet conditions
- Easy adaptation to non-optimised application parameters
- The suction lift (Hp) is less critical (the height of the degassing tank used in boiler feeding can be reduced).

**Consequences of using impellers for lower NPSH values:**

- No need to change pump installation heights or pump nozzles
- Minor adjustments to the characteristic curve

**Calculation:**

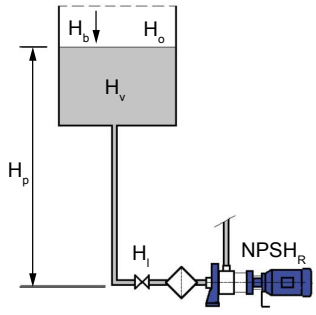


$$NPSH_A \geq NPSH_R + H_z$$

$$NPSH_A = H_b + H_o + H_p - H_v - H_l$$

$$x = H_b + H_o + H_p - H_v - H_l - NPSH_R - H_z$$

$$x \geq 0$$

**Fig. 1:** Calculating the $NPSH_A$

| | |
|---|---|
| $NPSH_A$ | NPSH system value at operating point |
| $NPSH_R$ | NPSH pump value at operating point (see characteristic curve of the pump) |
| $H_b$ | Atmospheric pressure [mWc] |
| $H_o$ | Positive pressure (with tank closed) [mWc] |
| $H_p$ | Suction lift [mWc] |
| $H_v$ | Vaporisation pressure [mWc] (see water vaporisation pressure diagram) |

| | |
|---|---|
| $H_l$ | Friction losses in pipes and accessories [mWc] |
| $H_z$ | Safety margin (min. 0,5 m) |
| x | Minimum pressure |

**Result:**

If the minimum pressure (x) is positive, there is no risk of cavitation.

If the minimum pressure (x) is negative, there is a risk of cavitation which can be avoided by using an impeller for lower NPSH values.
Another option is to change one of the other values so that the value becomes positive.

**Example:**

- Boiler feed water: 105 °C
- Positive height of tank: 2 m
- Positive pressure in tank: 3 mWc
- Flow rate: 5 m³/h
- Head: 100 m (10 bar)
- Size selected: 4

Calculation of positive pressure on suction flange:

| Calculation of positive pressure on suction flange: | Standard impeller | Special impeller for lower NPSH values |
|---|---|---|
| Atmospheric pressure [mWc] | 10,3 | 10,3 |
| Positive pressure (with tank closed) | 3,0 | 3,0 |
| Suction lift | 2,0 | 2,0 |
| Vaporisation pressure [mWc] (see water vaporisation pressure diagram) | -12,5 | -12,5 |
| Friction losses in pipes and accessories [mWc] | -1,0 | -1,0 |
| Safety margin (min. 0,5 m) | -0,5 | -0,5 |
| NPSH pump value at operating point (see characteristic curve of the pump) | -2,1 | -0,8 |
| Minimum pressure | -0,8 | +0,5 |
| Conclusion | Cavitation will occur. | No cavitation |

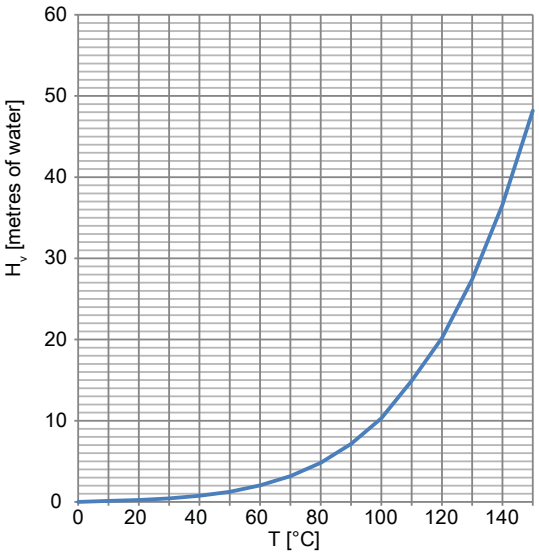


**Fig. 2:** Vaporisation pressure diagram ($H_v$) for water

### Information about the characteristic curve

NPSH [m], [ft]:

- The NPSH values given in the individual characteristic curves are minimum values which correspond to the cavitation limit.
- A safety margin of at least 0.5 m must be added when selecting the pump to compensate for measuring inaccuracies.
- The NPSH curves reflect average values.
- A safety margin of 0.5 m must be added to the NPSH value of the characteristic curve when selecting a system.

P [kW], [hp]:

- The power input is indicated per stage (St = 1).
  The pump input power can be calculated accordingly.
  Calculation: value indicated in the diagram (St = 1) × number of stages
  Example: Movitec H(S)I 15/4: P = (St = 1) × 4

### Fluid handled

The actual operating conditions must always be checked (concentration, temperature, solids content). Penetration of air into the system must be avoided by all means.

If the fluid handled contains solids such as steel chips or steel chip dust, check the permissible particle concentration with KSB.

### Minimum flow rate and maximum flow rate

Minimum flow rate and maximum flow rate Q at a fluid temperature ≤ +20 °C depending on the speed, 50 Hz

| Movitec H(S)I | Q | | | |
|---|---|---|---|---|
| | 2900 rpm | | 1450 rpm | |
| | Min. | Max. | Min. | Max. |
| | [m³/h] | [m³/h] | [m³/h] | [m³/h] |
| 2B | 0,2 | 3,3 | - | - |
| 4B | 0,4 | 6,5 | - | - |
| 6B | 0,6 | 9,0 | - | - |
| 10B | 1,1 | 13,2 | 0,5 | 6,6 |
| 15B | 1,6 | 22,5 | 0,8 | 11,3 |

Minimum flow rate and maximum flow rate Q at a fluid temperature ≤ +20 °C depending on the speed, 60 Hz

| Movitec H(S)I | Q | | | |
|---|---|---|---|---|
| | 3500 rpm | | 1750 rpm | |
| | Min. | Max. | Min. | Max. |
| | [m³/h] | [m³/h] | [m³/h] | [m³/h] |
| 2B | 0,2 | 4,0 | - | - |
| 4B | 0,5 | 7,8 | - | - |
| 6B | 0,8 | 8,6 | - | - |
| 10B | 1,3 | 15,8 | 0,6 | 7,9 |
| 15B | 2,0 | 27,0 | 1,0 | 13,5 |

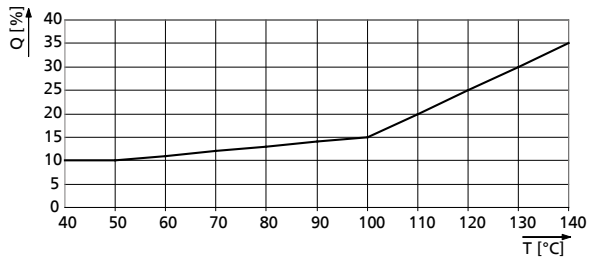


**Fig. 3:** Minimum flow rate required as a function of fluid temperature at a fluid temperature > +20 °C

## Overview of product features / selection tables

### Table of fluids handled

The data refer to the chemical resistance of the materials. The relevant regulations / standards governing individual pump applications have to be complied with.

If the operating conditions differ from the data given (e.g. mixed products) or if the fluids handled are not included in the table below, please contact KSB.

- **Temperature ranges:**
  - Reference temperature: +20 °C
  - For temperatures <0 °C: contact KSB.
  - For temperatures > +50 °C: check and observe the vapour pressure of the fluid handled.
  - Max. temperature = +120 °C, unless indicated otherwise.
- Max. concentration = 100 % unless indicated otherwise.
- Mechanical seal silicon carbide / carbon (Q1B): not suitable for fluids containing solid substances. This rule also covers particles developing as a result of salt crystallisation at low fluid temperatures.
- Mechanical seal tungsten carbide / tungsten carbide (U3U3): solids content max. 20 ppm (depending on particle size), with the exception of corrosive fluids. Fluids with a higher solids content are not permitted (ppm = 1 mg/kg).
- Caution: High temperatures will increase corrosion (reference temperature = +20 °C).
- Under unfavourable conditions (high temperatures, deposits, long idle periods), chloride contents of more than 300 mg/l may result in localised corrosion.

Selecting the design of pump and mechanical seal depending on the fluid to be handled

| Fluid handled | | | Design | | | | | | | | | |
|---|---|---|---|---|---|---|---|---|---|---|---|---|
| Substance contained | Max. percentage | $T_{max.}$ | H | | | | | HS | | | | |
| | [%] | [°C] | 13 | 14 | 15 | 16 | 18 | 13 | 14 | 15 | 16 | 18 |
| Alum, acid-free | ≤ 3 | +50 | - | ✗ | - | - | - | - | ✗ | - | - | - |
| Alum, acid-free | ≤ 3 | +80 | - | - | - | - | - | - | ✗ | - | - | - |
| Alkaline solution, bottle rinsing, max. 2 % sodium hydroxide | ≤ 100 | +40 | - | - | ✗ | - | - | - | - | ✗ | - | - |
| Alcohol | | | | | | | | | | | | |
| ▪ Butanol | ≤ 100 | +60 | ✗ | - | - | - | - | ✗ | - | - | - | - |
| ▪ Ethanol | ≤ 100 | +60 | ✗ | - | - | - | - | ✗ | - | - | - | - |
| ▪ Propanol | ≤ 100 | +80 | ✗ | - | - | - | - | ✗ | - | - | - | - |
| ▪ Spirits (40 % ethanol) | ≤ 100 | +60 | ✗ | - | - | - | - | ✗ | - | - | - | - |
| Wine (white, red) | ≤ 100 | +60 | ✗ | ✗ | - | - | - | ✗ | ✗ | - | - | - |
| Tartaric acid | ≤ 100 | +60 | - | - | - | - | - | - | - | - | - | - |
| Ammonium bicarbonate | ≤ 10 | +40 | ✗ | - | - | - | - | ✗ | - | - | - | - |
| Aluminium sulphate, acid-free | ≤ 5 | +50 | - | - | - | ✗ | - | - | - | - | ✗ | - |
| Aluminium sulphate, acid-free | ≤ 5 | +60 | - | - | - | - | - | - | - | - | ✗ | - |
| Ammonium sulphate | ≤ 20 | +60 | ✗ | - | - | - | - | ✗ | - | - | - | - |
| Calcium acetate, acid-free | ≤ 10 | +60 | ✗ | - | - | - | - | ✗ | - | - | - | - |
| Calcium nitrate, acid-free | ≤ 10 | +60 | - | - | - | ✗ | - | - | - | - | ✗ | - |
| Ferric sulphate (II) | ≤ 5 | +80 | - | - | - | ✗ | - | - | - | - | ✗ | - |
| Water-oil emulsion (95 %, 5 %), free of solids | ≤ 100 | +80 | - | ✗ | - | - | - | - | ✗ | - | - | - |
| Ethylene glycol base anti-freeze, inhibited, closed system | ≤ 20 | +110 | ✗[4)] | ✗ | - | ✗ | - | ✗[4)] | ✗ | - | ✗ | - |
| | ≤ 25 | +110 | ✗[4)] | ✗ | - | ✗ | - | ✗[4)] | ✗ | - | ✗ | - |
| | ≤ 30 | +110 | ✗[4)] | ✗ | - | ✗ | - | ✗[4)] | ✗ | - | ✗ | - |
| | ≤ 35 | +110 | ✗[4)] | ✗ | - | ✗ | - | ✗[4)] | ✗ | - | ✗ | - |
| | ≤ 40 | +110 | ✗[4)] | ✗ | - | ✗ | - | ✗[4)] | ✗ | - | ✗ | - |
| | ≤ 45 | +110 | ✗[4)] | ✗ | - | ✗ | - | ✗[4)] | ✗ | - | ✗ | - |
| | ≤ 50 | +110 | ✗[4)] | ✗ | - | ✗ | - | ✗[4)] | ✗ | - | ✗ | - |
| Ethylene glycol base anti-freeze, inhibited, open system | ≤ 20 | +110 | ✗[4)] | ✗ | - | ✗ | - | ✗[4)] | ✗ | - | ✗ | - |
| | ≤ 25 | +110 | ✗[4)] | ✗ | - | ✗ | - | ✗[4)] | ✗ | - | ✗ | - |
| | ≤ 30 | +110 | ✗[4)] | ✗ | - | ✗ | - | ✗[4)] | ✗ | - | ✗ | - |
| | ≤ 35 | +110 | ✗[4)] | ✗ | - | ✗ | - | ✗[4)] | ✗ | - | ✗ | - |
| | ≤ 40 | +110 | ✗[4)] | ✗ | - | ✗ | - | ✗[4)] | ✗ | - | ✗ | - |
| | ≤ 45 | +110 | ✗[4)] | ✗ | - | ✗ | - | ✗[4)] | ✗ | - | ✗ | - |

4) ≤ 100 °C

| Fluid handled | | | Design | | | | | | | | | |
|---|---|---|---|---|---|---|---|---|---|---|---|---|
| Substance contained | Max. percentage | $T_{max.}$ | H | | | | | HS | | | | |
| | [%] | [°C] | 13 | 14 | 15 | 16 | 18 | 13 | 14 | 15 | 16 | 18 |
| Ethylene glycol base anti-freeze, inhibited, open system | ≤ 50 | +110 | ✗[4] | ✗ | - | ✗ | - | ✗[4] | ✗ | - | ✗ | - |
| Glycerine | ≤ 40 | +80 | ✗ | ✗ | - | - | - | ✗ | ✗ | - | - | - |
| Glycols (pure) | ≤ 100 | +100 | - | - | - | - | - | - | - | - | - | - |
| Diethylene glycol | ≤ 100 | +100 | ✗ | ✗ | - | - | - | ✗ | ✗ | - | - | - |
| Ethylene glycol | ≤ 100 | +100 | ✗ | ✗ | - | - | - | ✗ | ✗ | - | - | - |
| Potassium hydroxide | ≤ 5 | +40 | - | - | ✗ | - | - | - | - | ✗ | - | - |
| Potassium nitrate, acid-free | ≤ 5 | +30 | - | - | ✗ | - | - | - | - | ✗ | - | - |
| Potassium sulphate, acid-free | ≤ 3 | +20 | - | ✗ | - | - | - | - | ✗ | - | - | - |
| Copper sulphate | ≤ 5 | +80 | - | - | ✗ | - | - | - | - | ✗ | - | - |
| Magnesium sulphate | ≤ 10 | +80 | - | ✗ | - | - | - | - | ✗ | - | - | - |
| Milk | ≤ 100 | +60 | ✗ | ✗ | - | - | - | ✗ | ✗ | - | - | - |
| Lactic acid | ≤ 40 | +60 | - | - | - | - | - | - | - | - | - | - |
| Miscella[5] | ≤ 100 | +40 | - | - | - | - | - | - | - | - | - | - |
| Sodium carbonate | ≤ 6 | +60 | ✗ | - | - | - | - | ✗ | - | - | - | - |
| Sodium hydroxide | ≤ 5 | +60 | - | - | ✗ | - | - | - | - | ✗ | - | - |
| Sodium nitrate, acid-free | ≤ 10 | +30 | ✗ | - | - | - | - | ✗ | - | - | - | - |
| Sodium nitrate, acid-free | ≤ 10 | +60 | ✗ | - | - | - | - | - | - | - | - | - |
| Sodium sulphate, acid-free | ≤ 5 | +60 | ✗ | - | - | - | - | ✗ | - | - | - | - |
| Oil | | | | | | | | | | | | |
| ▪ Peanut oil | ≤ 100 | +90 | - | ✗ | - | - | - | - | ✗ | - | - | - |
| ▪ Peanut oil | ≤ 100 | +100 | - | - | - | - | - | - | - | - | - | - |
| ▪ Linseed oil, ≤ 3 % $H_2SO_4$ | ≤ 100 | +20 | - | ✗ | - | - | - | - | ✗ | - | - | - |
| ▪ Linseed oil, ≤ 3 % $H_2SO_4$ | ≤ 100 | +60 | - | - | - | - | - | - | ✗ | - | - | - |
| ▪ Hydraulic oil[5] | ≤ 100 | +80 | - | - | - | - | - | - | - | - | - | - |
| ▪ Linseed oil | ≤ 100 | +60 | - | ✗ | - | - | - | - | ✗ | - | - | - |
| ▪ Linseed oil | ≤ 100 | +60 | - | - | - | - | - | - | - | - | - | - |
| ▪ Corn oil | ≤ 100 | +100 | - | ✗ | - | - | - | - | ✗ | - | - | - |
| ▪ Mineral oil[5] | ≤ 100 | +80 | - | - | - | - | - | - | - | - | - | - |
| ▪ Vegetable oil[5] | ≤ 100 | +100 | - | - | - | - | - | - | - | - | - | - |
| ▪ Rapeseed oil | ≤ 100 | +100 | - | ✗ | - | - | - | - | ✗ | - | - | - |
| ▪ Salad oil | ≤ 100 | +100 | - | - | - | - | - | - | - | - | - | - |
| ▪ Lubricating oil[5] | ≤ 100 | +100 | - | - | - | - | - | - | - | - | - | - |
| ▪ Silicone oil[5] | ≤ 100 | +60 | - | - | - | - | - | - | - | - | - | - |
| ▪ Soybean oil | ≤ 100 | +100 | - | ✗ | - | - | - | - | ✗ | - | - | - |
| ▪ Turpentine oil[5] | ≤ 100 | +60 | - | - | - | - | - | - | - | - | - | - |
| ▪ Turbine oil (no SDF oils)[5] | ≤ 100 | +100 | - | - | - | - | - | - | - | - | - | - |
| ▪ Oil-water mixtures | ≤ 100 | +100 | - | - | - | - | - | - | - | - | - | - |
| Paraffin[5] | ≤ 100 | +100 | - | - | - | - | - | - | - | - | - | - |
| Kerosene | ≤ 100 | +80 | - | ✗ | - | - | - | - | ✗ | - | - | - |
| Polyethylene glycol[5] | ≤ 100 | +80 | - | - | - | - | - | - | - | - | - | - |
| Polyglycol[5] | ≤ 100 | +80 | - | - | - | - | - | - | - | - | - | - |
| Crude oil[5] | ≤ 100 | +80 | - | - | - | - | - | - | - | - | - | - |
| Crude oil condensate[5] | ≤ 100 | +80 | - | - | - | - | - | - | - | - | - | - |
| Juice (fruit and sugar juice) | ≤ 100 | +60 | - | ✗ | - | - | - | - | ✗ | - | - | - |
| Acid | | | | | | | | | | | | |
| ▪ Acetic acid | ≤ 10 | +60 | ✗ | - | - | - | - | ✗ | - | - | - | - |
| ▪ Acetic acid | ≤ 5 | +60 | ✗ | - | - | - | - | ✗ | - | - | - | - |
| ▪ Tannic acid | ≤ 20 | +80 | - | ✗ | - | - | - | - | ✗ | - | - | - |

5) Fluid details are required in this case.

| Fluid handled | | | Design | | | | | | | | | |
|---|---|---|---|---|---|---|---|---|---|---|---|---|
| Substance contained | Max. percentage | $T_{max.}$ | H | | | | | HS | | | | |
| | [%] | [°C] | 13 | 14 | 15 | 16 | 18 | 13 | 14 | 15 | 16 | 18 |
| ▪ Maleic acid | ≤ 10 | +60 | - | ✗ | - | - | - | - | ✗ | - | - | - |
| ▪ Lactic acid | ≤ 5 | +60 | - | ✗ | - | - | - | - | ✗ | - | - | - |
| ▪ Lactic acid | ≤ 40 | +60 | - | ✗ | - | - | - | - | ✗ | - | - | - |
| ▪ Phosphoric acid | ≤ 5 | +20 | - | ✗ | - | - | - | - | ✗ | - | - | - |
| ▪ Sulphuric acid | ≤ 5 | +20 | - | - | - | - | - | - | - | - | ✗ | - |
| ▪ Tartaric acid | ≤ 8 | +40 | - | - | - | - | - | - | ✗ | - | - | - |
| ▪ Citric acid | ≤ 25 | +30 | - | ✗ | - | - | - | - | ✗ | - | - | - |
| ▪ Citric acid | ≤ 10 | +30 | - | ✗ | - | - | - | - | ✗ | - | - | - |
| Fuel | | | | | | | | | | | | |
| ▪ Diesel oil | ≤ 100 | +80 | - | ✗ | - | - | - | - | ✗ | - | - | - |
| ▪ Fuel oil | ≤ 100 | +80 | - | ✗ | - | - | - | - | ✗ | - | - | - |
| ▪ Jet fuel | ≤ 100 | +80 | - | ✗ | - | - | - | - | ✗ | - | - | - |
| Trisodium phosphate | ≤ 4 | +80 | - | - | ✗ | - | - | - | - | ✗ | - | - |
| Water | | | | | | | | | | | | |
| ▪ Deionised water (fully desalinated) | ≤ 100 | +140 | ✗ | - | - | - | ✗[6)] | ✗ | - | - | - | ✗[6)] |
| ▪ Distilled water | ≤ 100 | +140 | - | - | - | - | - | - | - | - | - | - |
| ▪ Dealkalised water | ≤ 100 | +120 | - | - | ✗ | - | - | - | - | ✗ | - | - |
| ▪ Decarbonised water | ≤ 100 | +120 | - | - | ✗ | - | - | - | - | ✗ | - | - |
| ▪ Swimming pool water (no brine) | ≤ 100 | +100 | - | - | - | - | - | - | - | - | - | - |
| ▪ Permeate (osmosis) | ≤ 100 | +140 | ✗ | - | - | - | ✗[6)] | ✗ | - | - | - | ✗[6)] |
| ▪ Partly desalinated water | ≤ 100 | +120 | - | - | ✗ | - | - | - | - | ✗ | - | - |
| ▪ Fire-fighting water | ≤ 100 | +60 | - | - | ✗ | - | ✗ | - | - | ✗ | - | ✗ |
| ▪ Heating water in accordance with VDI 2035 | ≤ 100 | +100 | ✗ | - | - | - | ✗ | ✗ | - | - | - | ✗ |
| ▪ Hot water treated in accordance with VdTüV 1466 | ≤ 100 | +140 | ✗[4)] | - | - | - | ✗[6)] | ✗[4)] | - | - | - | ✗[6)] |
| ▪ Boiler feed water to VdTÜV 1466 | ≤ 100 | +140 | ✗[4)] | - | - | - | ✗[6)] | ✗[4)] | - | - | - | ✗[6)] |
| ▪ Condensate treated in acc. with VdTÜV 1466 | ≤ 100 | +140 | ✗[4)] | - | - | - | ✗[6)] | ✗[4)] | - | - | - | ✗[6)] |
| ▪ Vapour condensate (brewery) | ≤ 100 | +140 | ✗[4)] | - | - | - | ✗[6)] | ✗[4)] | - | - | - | ✗[6)] |
| ▪ Cooling water | ≤ 100 | +100 | - | - | - | ✗ | - | - | - | - | ✗ | - |
| ▪ Tap water | ≤ 100 | +60 | ✗ | - | - | - | - | ✗ | - | - | - | - |
| ▪ Brewing water | ≤ 100 | +60 | ✗ | - | - | - | - | ✗ | - | - | - | - |
| ▪ Ice water (brewery) | ≤ 100 | +60 | ✗ | - | - | - | - | ✗ | - | - | - | - |
| ▪ Drinking water / tap water | ≤ 100 | +60 | ✗ | - | - | - | - | ✗ | - | - | - | - |
| ▪ Hot water (brewery) | ≤ 100 | +60 | ✗ | - | - | - | - | ✗ | - | - | - | - |
| ▪ Clean water | ≤ 100 | +60 | ✗ | ✗ | ✗ | ✗ | ✗ | ✗ | ✗ | ✗ | ✗ | ✗ |
| ▪ Brackish water | ≤ 100 | +15 | - | - | - | - | - | - | - | - | ✗ | - |
| ▪ Seawater | ≤ 100 | +15 | - | - | - | - | - | - | - | - | ✗ | - |
| ▪ Raw water | ≤ 100 | +60 | - | - | ✗ | - | - | - | - | ✗ | - | - |
| ▪ Grey water, slightly contaminated water | ≤ 100 | +60 | - | - | ✗ | - | - | - | - | ✗ | - | - |
| ▪ River water | ≤ 100 | +60 | - | - | ✗ | - | - | - | - | ✗ | - | - |
| ▪ Lake water | ≤ 100 | +60 | - | - | ✗ | - | - | - | - | ✗ | - | - |
| ▪ Dam water | ≤ 100 | +60 | - | - | ✗ | - | - | - | - | ✗ | - | - |
| ▪ Surface water | ≤ 100 | +60 | - | - | ✗ | - | - | - | - | ✗ | - | - |

6) ≤ 120 °C, depending on the pressure classes

| Fluid handled | | | Design | | | | | | | | | |
|---|---|---|---|---|---|---|---|---|---|---|---|---|
| Substance contained | Max. percentage | $T_{max.}$ | H | | | | | HS | | | | |
| | [%] | [°C] | 13 | 14 | 15 | 16 | 18 | 13 | 14 | 15 | 16 | 18 |
| ▪ Fresh water | ≤ 100 | +60 | - | ✗ | - | - | - | - | ✗ | - | - | - |
| ▪ Barrier water | ≤ 100 | +70 | - | - | - | ✗ | - | - | - | - | ✗ | - |
| ▪ Rinsing water | ≤ 100 | +70 | - | - | - | ✗ | - | - | - | - | ✗ | - |
| ▪ Rainwater, with strainer | ≥ 20 | +60 | - | - | - | ✗ | - | - | - | - | ✗ | - |
| ▪ Water-glycol mixture | ≤ 100 | +100 | - | - | - | - | - | - | - | - | - | - |

## Shaft seal

Available mechanical seals

| Mechanical seal | | | | | | | T | | p |
|---|---|---|---|---|---|---|---|---|---|
| Code | Type | Code to EN 12756 | Elastomer | Design | | | Min. | Max. | [bar] |
| | | | | C | E | F | [°C] | [°C] | |
| 13 | RMG-G606 | Q1 B E G G | EPDM WRAS / ACS | ✗ | ✗ | ✗ | -20 | +100 | 25 |
| 14 | RMG-G606 | Q1 B V G G | FPM | ✗ | ✗ | ✗ | -20 | +120 | 25 |
| 15 | RMG-G606 | U3 U3 X4 G G | HNBR | ✗ | ✗ | ✗ | -20 | +120[7)] | 25 |
| 16 | RMG-G606 | U3 U3 V G G | FPM | ✗ | ✗ | ✗ | -20 | +120[7)] | 25 |
| 18 | RMG-G606 | U3 B E G G | EPDM 559236 | ✗ | ✗ | ✗ | -20 | +120[7)] | 25 |
| 23 | RMG-G606 | Q1 B E G G | EPDM | ✗ | ✗ | ✗ | -20 | +100 | 25 |
| 24 | MG-G606 | Q1 Q1 V G G | FPM | ✗ | ✗ | ✗ | -20 | +120 | 10 |
| 28 | MG-G606 | Q1 Q1 X4 G G | HNBR | ✗ | ✗ | ✗ | -20 | +120 | 10 |
| 29 | MG-G606 | Q1 Q1 E G G | EPDM | ✗ | ✗ | ✗ | -20 | +100 | 10 |

Key to mechanical seal materials

| Description | Code to EN 12756 | Seal face materials / secondary seals |
|---|---|---|
| Primary ring | U3 | Tungsten carbide (CrNiMo binder) |
| | Q1 | Silicon carbide (sintered without pressure) |
| Mating ring | B | Hard carbon, resin-impregnated |
| | U3 | Tungsten carbide (CrNiMo binder) |
| | Q1 | Silicon carbide (sintered without pressure) |
| Elastomer | E | EPDM (ethylene propylene rubber) |
| | V | FPM (fluoroelastomer) |
| | X4 | HNBR |
| Spring | G | CrNiMo steel |
| Other metal parts | G | CrNiMo steel |

## Pressure limits and temperature limits

The pump's pressure limits and temperature limits are indicated on the name plate.

7) Temperatures up to 140 °C if the pressure does not exceed 16 bar

## Technical data

### Motors

- Efficiency class IE3 to IEC 60034-30 (for three-phase motors ≥ 0.75 kW)

Technical motor data, 50 Hz

| $P_N$ | $U_N$ | $I_A$ | $I_A/I_N$ | cos φ | Tolerance $V_N$ | n | η | $L_p$ | Cable gland | Maximum frequency of starts |
|---|---|---|---|---|---|---|---|---|---|---|
| [kW] | [V] | [A] | | | [%] | rpm | [%] | [dB] | | [$h^{-1}$] |
| 0,37 | 1 × 230 | 2,60 | 3,7 | 0,92 | +/-10 | 2750 | 67,00 | 58 | 1 × M18 × 1,5 | 20 |
| 0,55 | 1 × 230 | 3,69 | 3,9 | 0,92 | +/-10 | 2760 | 70,00 | 56 | 1 × M18 × 1,5 | 20 |
| 0,75 | 1 × 230 | 5,00 | 3,9 | 0,92 | +/-10 | 2780 | 70,00 | 56 | 1 × M20 × 1,5 | 20 |
| 1,10 | 1 × 230 | 6,68 | 4,3 | 0,95 | +/-10 | 2790 | 75,00 | 58 | 1 × M20 × 1,5 | 20 |
| 1,50 | 1 × 230 | 8,99 | 4,8 | 0,95 | +/-10 | 2800 | 76,00 | 58 | 1 × M20 × 1,5 | 20 |
| 2,20 | 1 × 230 | 13,04 | 4,8 | 0,95 | +/-10 | 2800 | 77,00 | 58 | 1 × M20 × 1,5 | 20 |
| 0,37 | 230/400 | 1,64/0,94 | 4,6 | 0,78 | +/-10 | 2750 | 74,20 | 58 | 1 × M20 × 1,5 | 20 |
| 0,55 | 230/400 | 2,31/1,33 | 5,2 | 0,75 | +/-10 | 2790 | 77,60 | 58 | 1 × M20 × 1,5 | 20 |
| 0,75 | 230/400 | 2,92/1,68 | 6,8 | 0,80 | +/-10 | 2855 | 80,50 | 60 | 2 × M20 × 1,5 | 25 |
| 1,10 | 230/400 | 4,17/2,40 | 7,0 | 0,80 | +/-10 | 2855 | 82,70 | 60 | 2 × M25 × 1,5 | 25 |
| 1,50 | 230/400 | 5,08/2,92 | 7,7 | 0,88 | +/-10 | 2900 | 84,20 | 63 | 2 × M25 × 1,5 | 25 |
| 2,20 | 230/400 | 7,22/4,15 | 7,7 | 0,89 | +/-10 | 2900 | 86,00 | 63 | 2 × M25 × 1,5 | 25 |
| 3,00 | 230/400 | 9,71/5,59 | 8,8 | 0,89 | +/-10 | 2910 | 87,10 | 63 | 2 × M25 × 1,5 | 20 |
| 3,00 | 400/690 | 5,59/3,24 | 8,8 | 0,89 | +/-10 | 2910 | 87,10 | 63 | 2 × M25 × 1,5 | 20 |
| 4,00 | 230/400 | 13,00/7,45 | 8,5 | 0,88 | +/-10 | 2910 | 88,10 | 63 | 2 × M25 × 1,5 | 20 |
| 4,00 | 400/690 | 7,45/4,32 | 8,5 | 0,88 | +/-10 | 2910 | 88,10 | 63 | 2 × M25 × 1,5 | 20 |
| 5,50 | 230/400 | 17,40/10,00 | 8,8 | 0,89 | +/-10 | 2925 | 89,20 | 68 | 2 × M32 × 1,5 | 20 |
| 5,50 | 400/690 | 10,00/5,80 | 8,8 | 0,89 | +/-10 | 2925 | 89,20 | 68 | 2 × M32 × 1,5 | 20 |
| 7,50 | 230/400 | 23,20/13,40 | 8,8 | 0,90 | +/-10 | 2925 | 89,80 | 68 | 2 × M32 × 1,5 | 20 |
| 7,50 | 400/690 | 13,40/7,74 | 8,8 | 0,90 | +/-10 | 2925 | 89,80 | 68 | 2 × M32 × 1,5 | 20 |
| 0,55 | 230/400 | 2,34/1,34 | 5,3 | 0,73 | +/-10 | 1425 | 80,70 | 57 | 1 × M20 × 1,5 | 20 |
| 0,75 | 230/400 | 3,13/1,80 | 6,5 | 0,73 | +/-10 | 1425 | 82,50 | 57 | 1 × M20 × 1,5 | 20 |
| 1,10 | 230/400 | 4,21/2,42 | 6,5 | 0,78 | +/-10 | 1440 | 84,40 | 58 | 1 × M20 × 1,5 | 20 |
| 1,50 | 230/400 | 5,59/3,21 | 7,0 | 0,79 | +/-10 | 1440 | 85,30 | 58 | 1 × M25 × 1,5 | 20 |
| 2,20 | 230/400 | 7,86/4,52 | 7,5 | 0,81 | +/-10 | 1445 | 86,70 | 59 | 2 × M25 × 1,5 | 20 |
| 3,00 | 230/400 | 10,60/6,10 | 7,5 | 0,81 | +/-10 | 1445 | 87,70 | 59 | 2 × M25 × 1,5 | 20 |
| 3,00 | 400/690 | 6,10/3,53 | 7,5 | 0,81 | +/-10 | 1445 | 87,70 | 59 | 2 × M25 × 1,5 | 20 |
| 4,00 | 230/400 | 14,00/8,05 | 8,5 | 0,81 | +/-10 | 1450 | 88,50 | 60 | 2 × M25 × 1,5 | 20 |
| 4,00 | 400/690 | 8,05/4,66 | 8,5 | 0,81 | +/-10 | 1450 | 88,60 | 60 | 2 × M25 × 1,5 | 20 |
| 5,50 | 230/400 | 19,00/10,90 | 8,5 | 0,81 | +/-10 | 1460 | 89,90 | 60 | 2 × M32 × 1,5 | 20 |
| 5,50 | 400/690 | 10,90/6,34 | 8,5 | 0,81 | +/-10 | 1460 | 89,60 | 60 | 2 × M32 × 1,5 | 20 |
| 7,50 | 230/400 | 25,40/14,60 | 8,5 | 0,82 | +/-10 | 1460 | 90,40 | 60 | 2 × M32 × 1,5 | 20 |
| 7,50 | 400/690 | 14,60/8,47 | 8,5 | 0,82 | +/-10 | 1460 | 90,40 | 60 | 2 × M32 × 1,5 | 20 |

Technical motor data, 60 Hz

| $P_N$ | $U_N$ | $I_A$ | $I_A/I_N$ | cos φ | Tolerance $V_N$ | n | η | $L_p$ | Cable gland | Maximum frequency of starts |
|---|---|---|---|---|---|---|---|---|---|---|
| [kW] | [V] | [A] | | | [%] | [rpm] | [%] | [dB] | | [$h^{-1}$] |
| 0,37 | 230/400 | 1,54/0,89 | 3,90 | 0,79 | +20/-5 | 3300 | 75,70 | 58 | 1 × M20 × 1,5 | 20 |
| 0,55 | 230/400 | 2,29/1,32 | 4,40 | 0,76 | +20/ -5 | 3345 | 79,10 | 58 | 1 × M20 × 1,5 | 20 |
| 0,75 | 230/400 | 2,94/1,69 | 7,40 | 0,79 | +20/-5 | 3450 | 81,10 | 58 | 1 × M20 × 1,5 | 20 |
| 1,10 | 230/400 | 4,14/2,38 | 5,80 | 0,80 | +20/-5 | 3450 | 83,30 | 58 | 1 × M20 × 1,5 | 20 |
| 1,50 | 230/400 | 4,98/2,86 | 6,20 | 0,89 | +20/-5 | 3480 | 85,00 | 58 | 1 × M25 × 1,5 | 20 |
| 2,20 | 230/400 | 7,14/4,11 | 6,20 | 0,90 | +20/-5 | 3480 | 85,90 | 60 | 1 × M25 × 1,5 | 20 |
| 3,00 | 230/400 | 9,51/5,47 | 7,50 | 0,91 | +20/-5 | 3480 | 87,00 | 62 | 2 × M25 × 1,5 | 20 |
| 3,00 | 400/690 | 5,47/3,17 | 7,50 | 0,91 | +20/-5 | 3480 | 87,00 | 62 | 2 × M25 × 1,5 | 20 |
| 4,00 | 230/400 | 12,49/7,18 | 7,20 | 0,90 | +20/-5 | 3500 | 89,30 | 64 | 2 × M25 × 1,5 | 20 |
| 4,00 | 400/690 | 7,18/4,16 | 7,20 | 0,90 | +20/-5 | 3500 | 89,30 | 64 | 2 × M25 × 1,5 | 20 |
| 5,50 | 230/400 | 17,22/9,90 | 6,40 | 0,90 | +20/-5 | 3510 | 89,10 | 68 | 2 × M32 × 1,5 | 20 |
| 5,50 | 400/690 | 9,90/5,74 | 6,40 | 0,90 | +20/-5 | 3510 | 89,10 | 68 | 2 × M32 × 1,5 | 20 |
| 7,50 | 230/400 | 23,29/13,29 | 6,40 | 0,90 | +20/-5 | 3510 | 89,80 | 68 | 2 × M32 × 1,5 | 20 |
| 7,50 | 400/690 | 13,39/7,76 | 6,40 | 0,90 | +20/-5 | 3510 | 89,80 | 68 | 2 × M32 × 1,5 | 20 |
| 0,55 | 230/400 | 2,30/1,32 | 4,50 | 0,74 | +20/-5 | 1710 | 81,00 | 57 | 1 × M20 × 1,5 | 20 |

| $P_N$ | $U_N$ | $I_A$ | $I_A/I_N$ | cos φ | Tolerance $V_N$ | n | η | $L_p$ | Cable gland | Maximum frequency of starts |
|---|---|---|---|---|---|---|---|---|---|---|
| [kW] | [V] | [A] | | | [%] | [rpm] | [%] | [dB] | | [$h^{-1}$] |
| 0,75 | 230/400 | 3,04/1,75 | 6,30 | 0,75 | +20/-5 | 1710 | 82,60 | 56 | 1 × M20 × 1,5 | 20 |
| 1,10 | 230/400 | 4,10/2,36 | 7,50 | 0,80 | +20/-5 | 1735 | 84,10 | 58 | 1 × M20 × 1,5 | 20 |
| 1,50 | 230/400 | 5,52/3,17 | 7,30 | 0,80 | +20/-5 | 1735 | 85,30 | 58 | 1 × M25 × 1,5 | 20 |
| 2,20 | 230/400 | 8,06/4,64 | 7,20 | 0,79 | +20/-5 | 1720 | 86,70 | 57 | 2 × M25 × 1,5 | 20 |
| 3,00 | 230/400 | 10,14/5,86 | 7,20 | 0,83 | +20/-5 | 1720 | 87,90 | 57 | 2 × M25 × 1,5 | 20 |
| 3,00 | 400/690 | 6,25/3,62 | 7,20 | 0,79 | +20/-5 | 1720 | 87,70 | 57 | 2 × M25 × 1,5 | 20 |
| 4,00 | 230/400 | 13,23/7,76 | 5,95 | 0,84 | +20/-5 | 1745 | 88,60 | 60 | 2 × M25 × 1,5 | 20 |
| 4,00 | 400/690 | 7,76/4,50 | 5,95 | 0,84 | +20/-5 | 1745 | 88,60 | 60 | 2 × M25 × 1,5 | 20 |
| 5,50 | 230/400 | 24,74/14,23 | 5,95 | 0,83 | +20/-5 | 1746 | 90,98 | 62 | 2 × M32 × 1,5 | 20 |
| 5,50 | 400/690 | 10,69/6,20 | 5,95 | 0,83 | +20/-5 | 1750 | 89,50 | 62 | 2 × M32 × 1,5 | 20 |
| 7,50 | 230/400 | 24,70/14,26 | 5,95 | 0,84 | +20/-5 | 1750 | 90,40 | 62 | 2 × M32 × 1,5 | 20 |
| 7,50 | 400/690 | 14,26/8,26 | 5,95 | 0,84 | +20/-5 | 1750 | 90,40 | 62 | 2 × M32 × 1,5 | 20 |

**Selection chart**
**Movitec H(S)I, n = 2900 rpm**

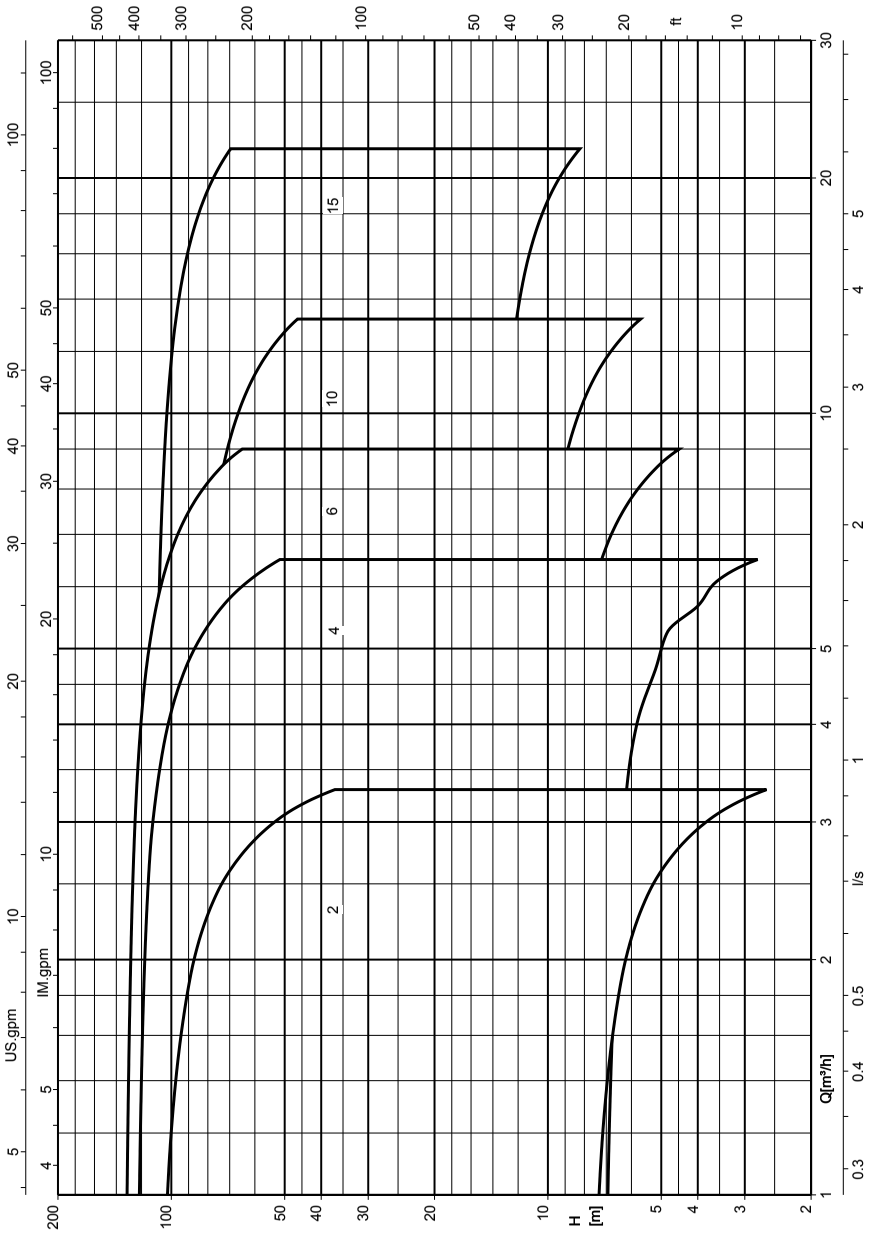

Movitec H(S)I, n = 1450 rpm

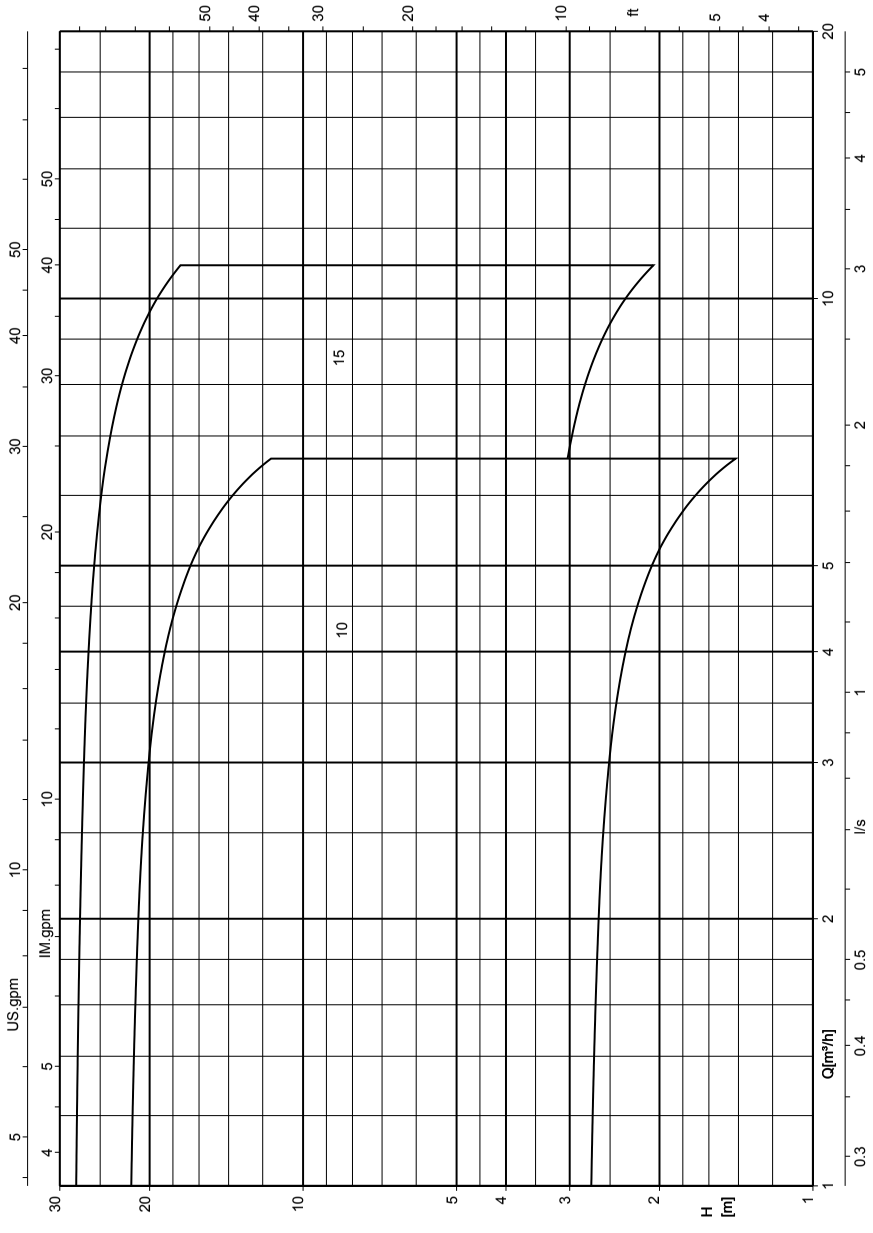

Movitec H(S)I, n = 3500 rpm

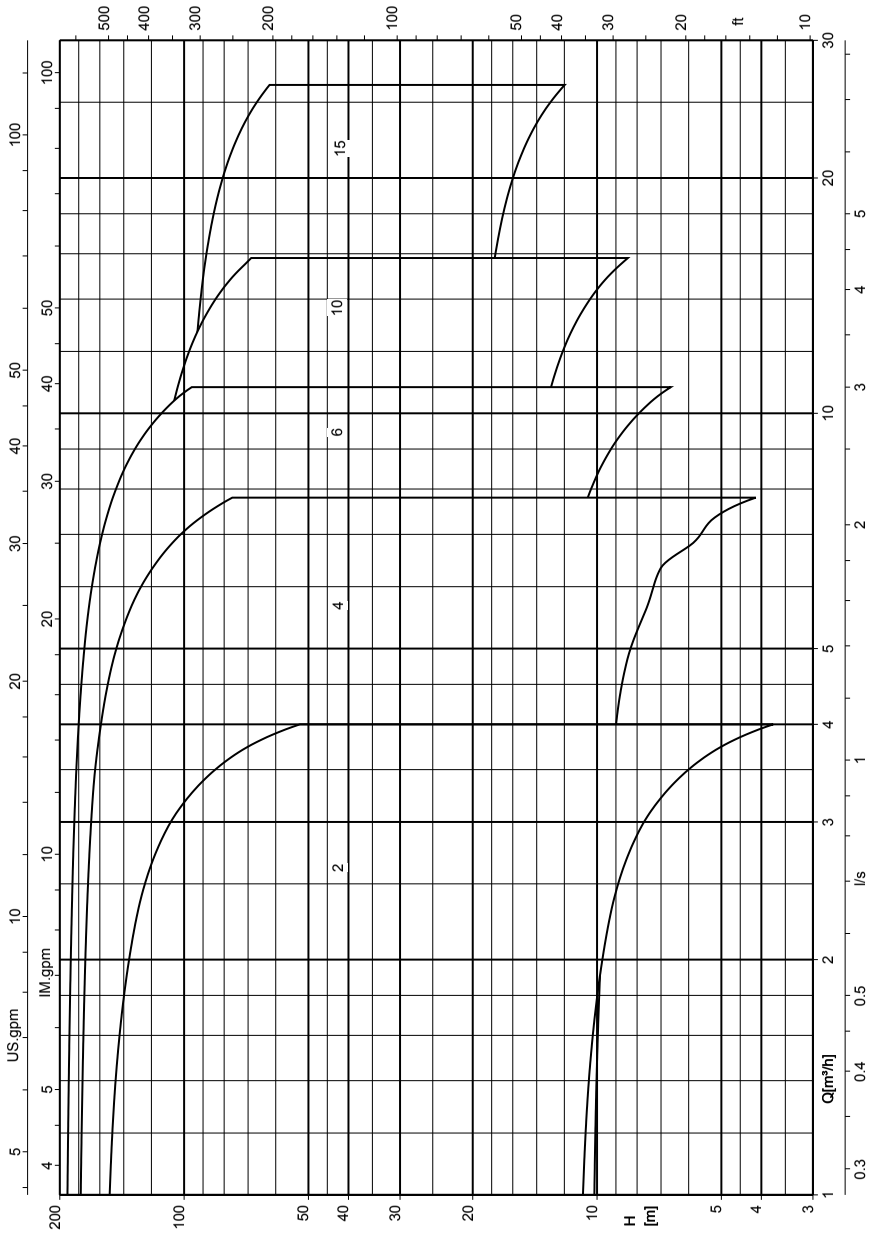

Movitec H(S)I, n = 1750 rpm

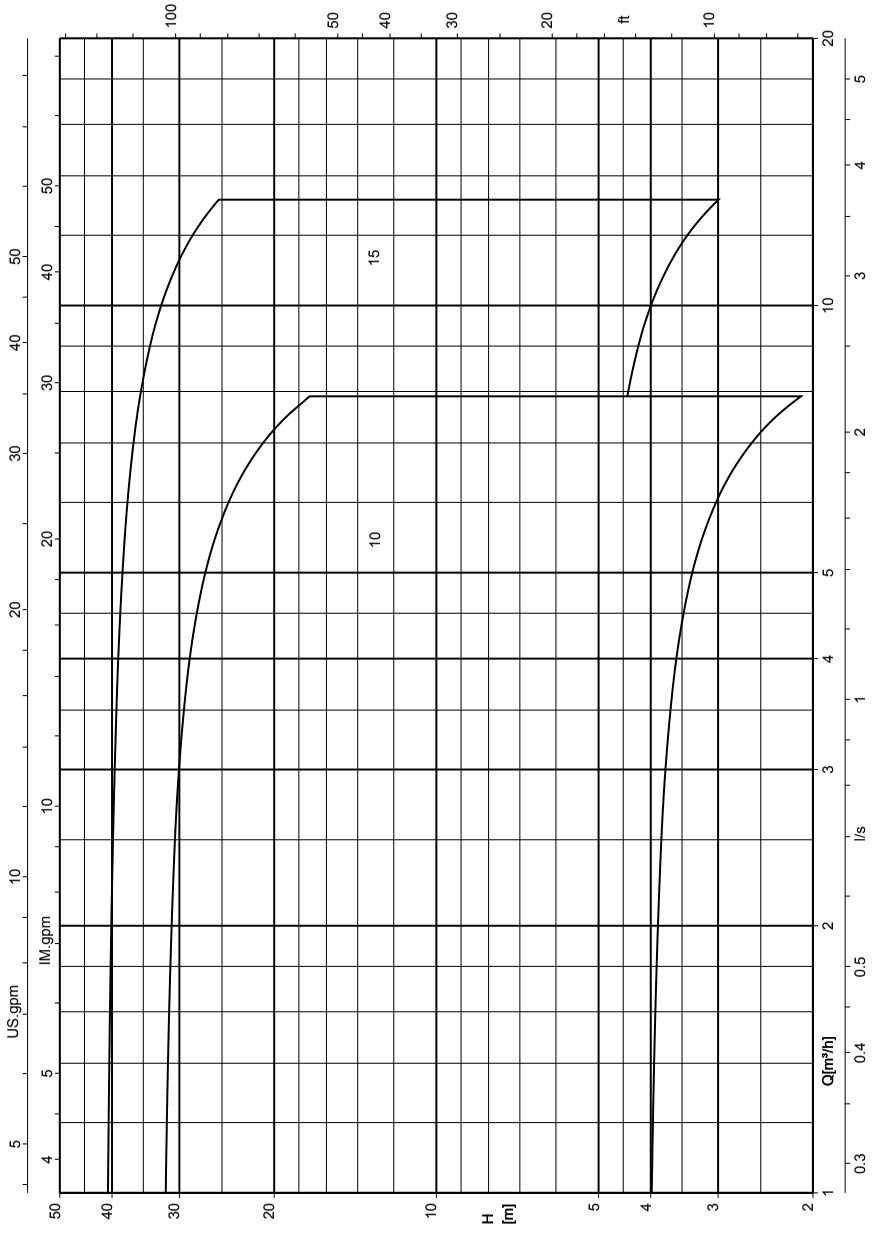

## Characteristic curves

**n = 2900 rpm**

**Movitec H(S)I, 2B, n = 2900 rpm**

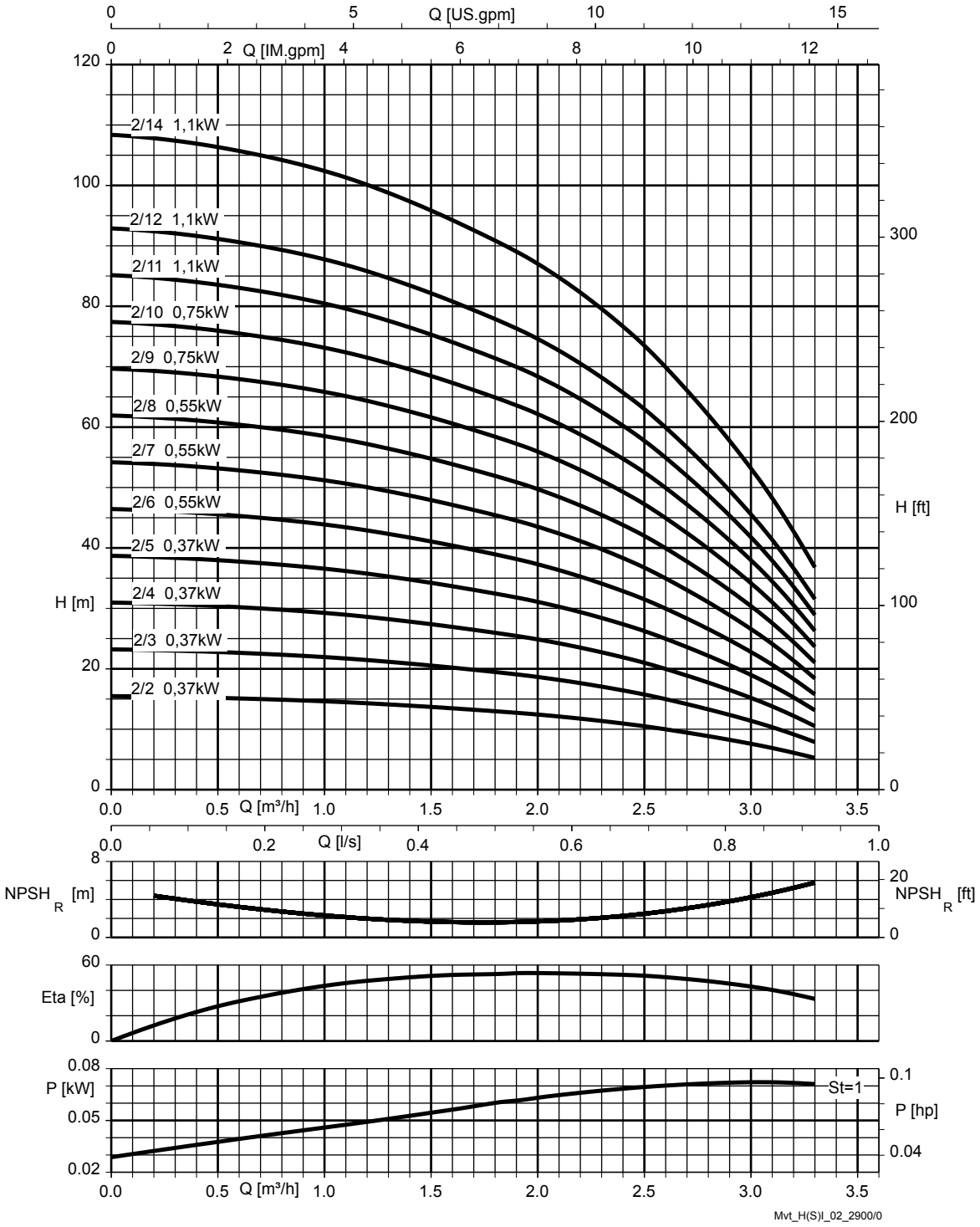


| | |
|---|---|
| St = 1 | P per stage |

**Movitec H(S)I, 2-LB, n = 2900 rpm**

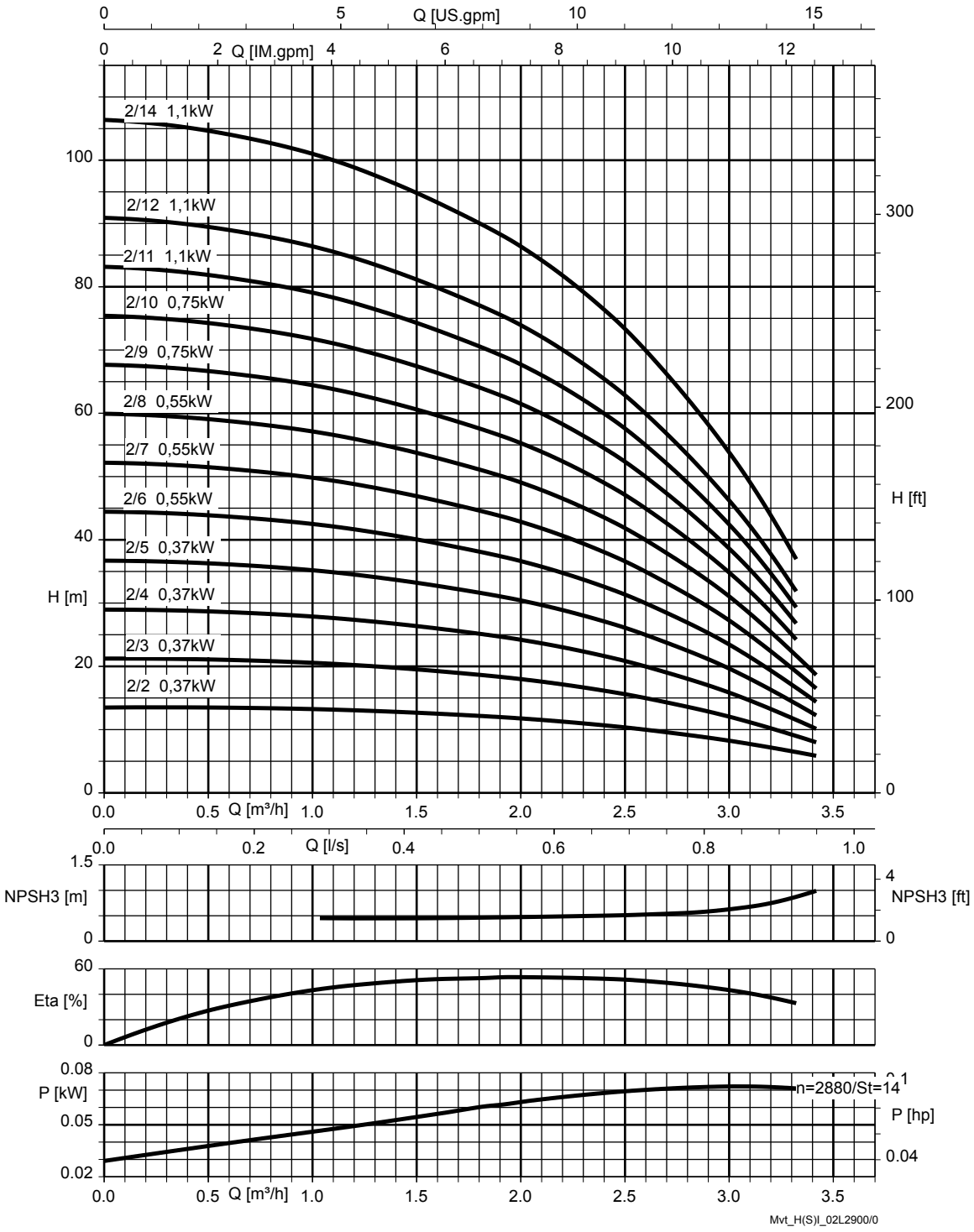


| | |
|---|---|
| St = 1 | P per stage |

**Movitec H(S)I, 4B, n = 2900 rpm**

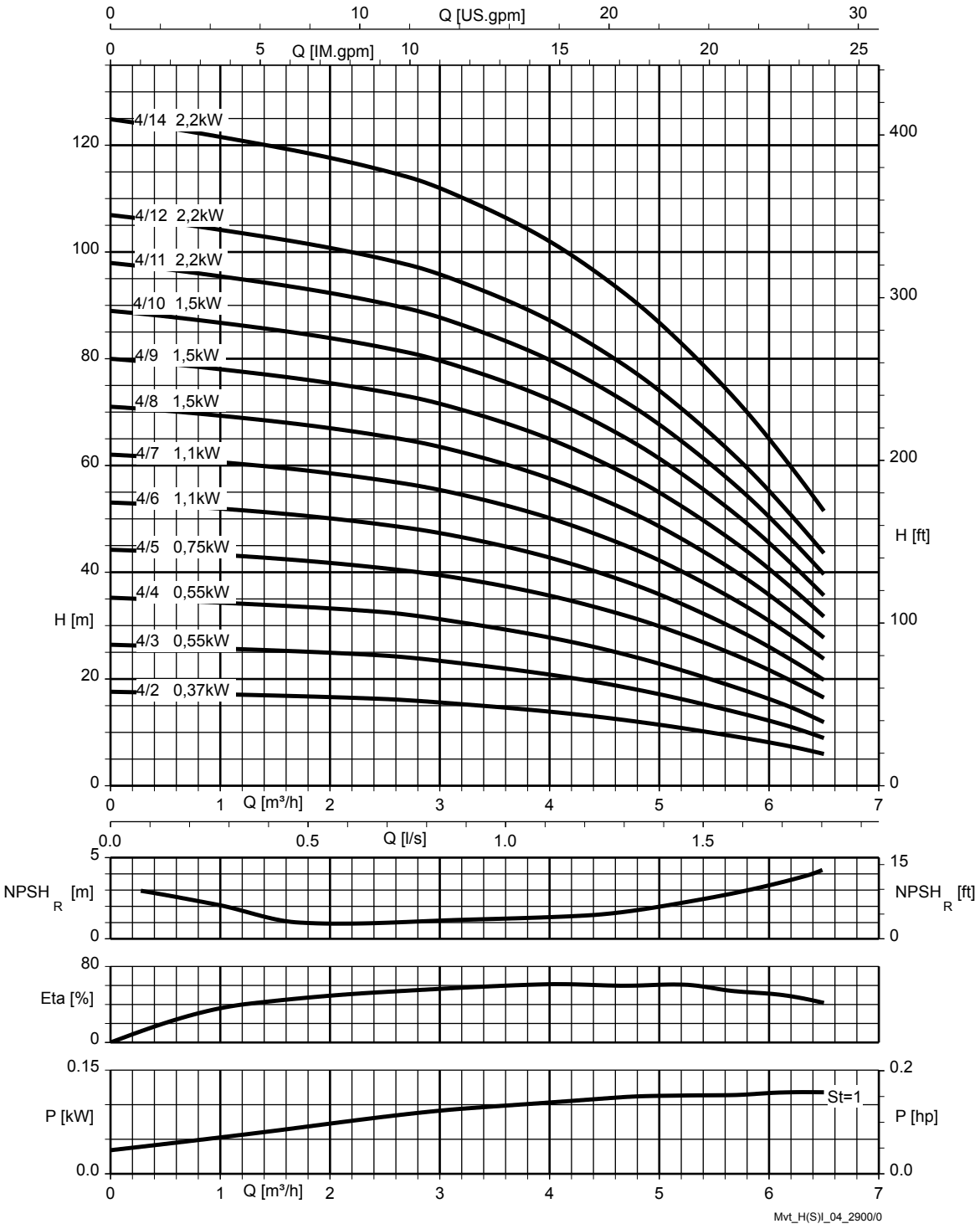


| | |
|---|---|
| St = 1 | P per stage |

**Movitec H(S)I, 4-LB, n = 2900 rpm**

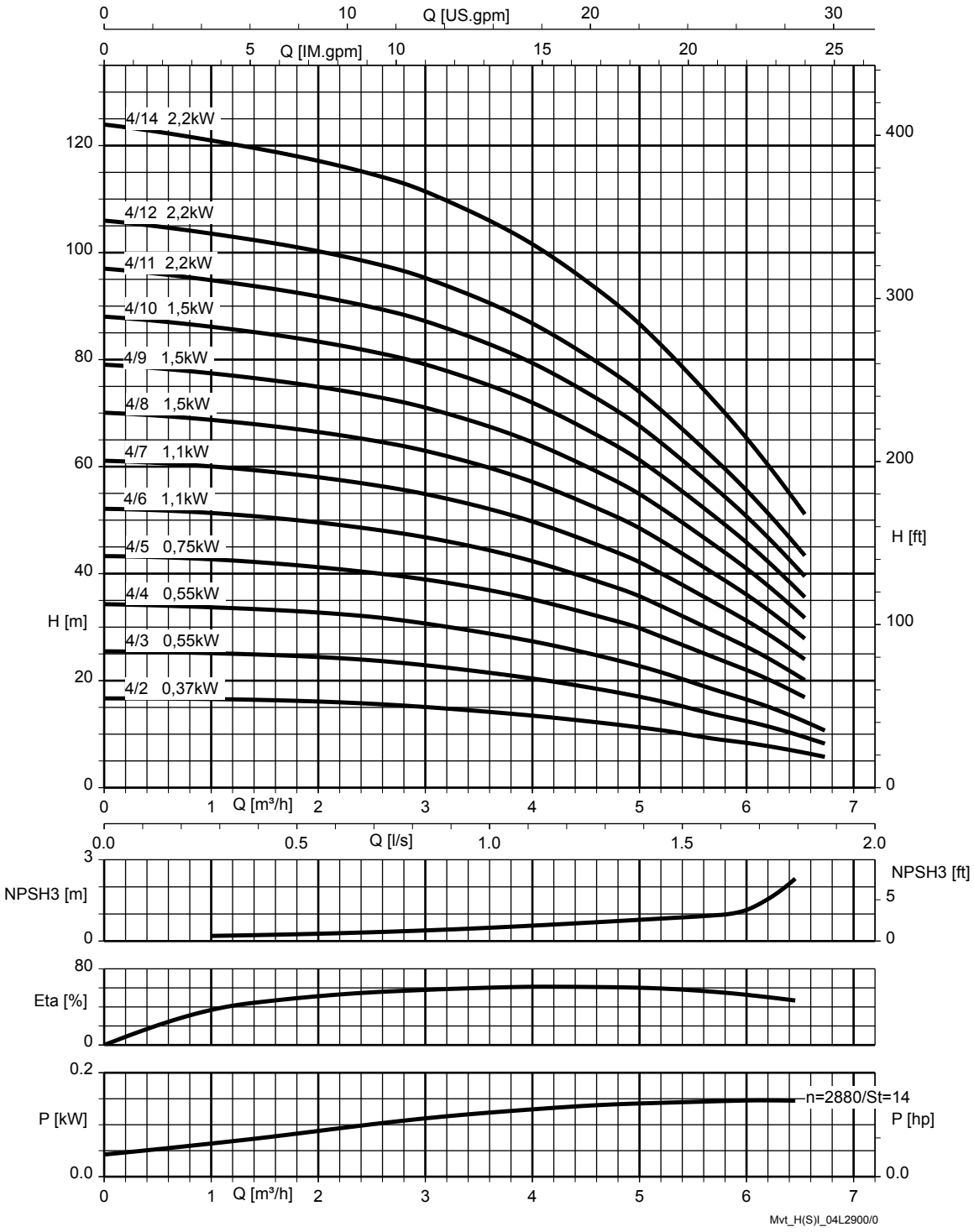


| | |
|---|---|
| St = 1 | P per stage |

## Movitec H(S)I, 6B, n = 2900 rpm

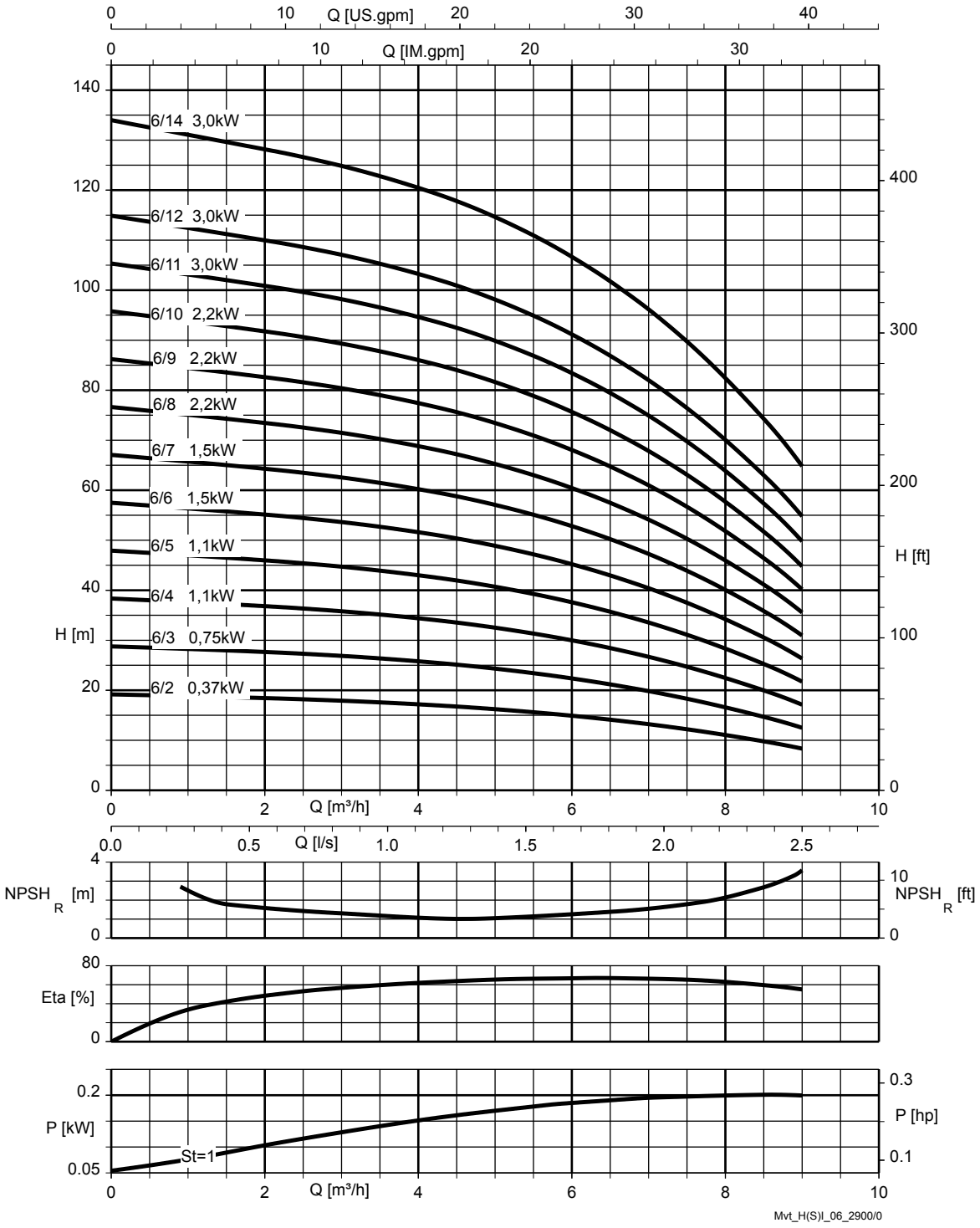


| | |
|---|---|
| St = 1 | P per stage |

**Movitec H(S)I, 6-LB, n = 2900 rpm**

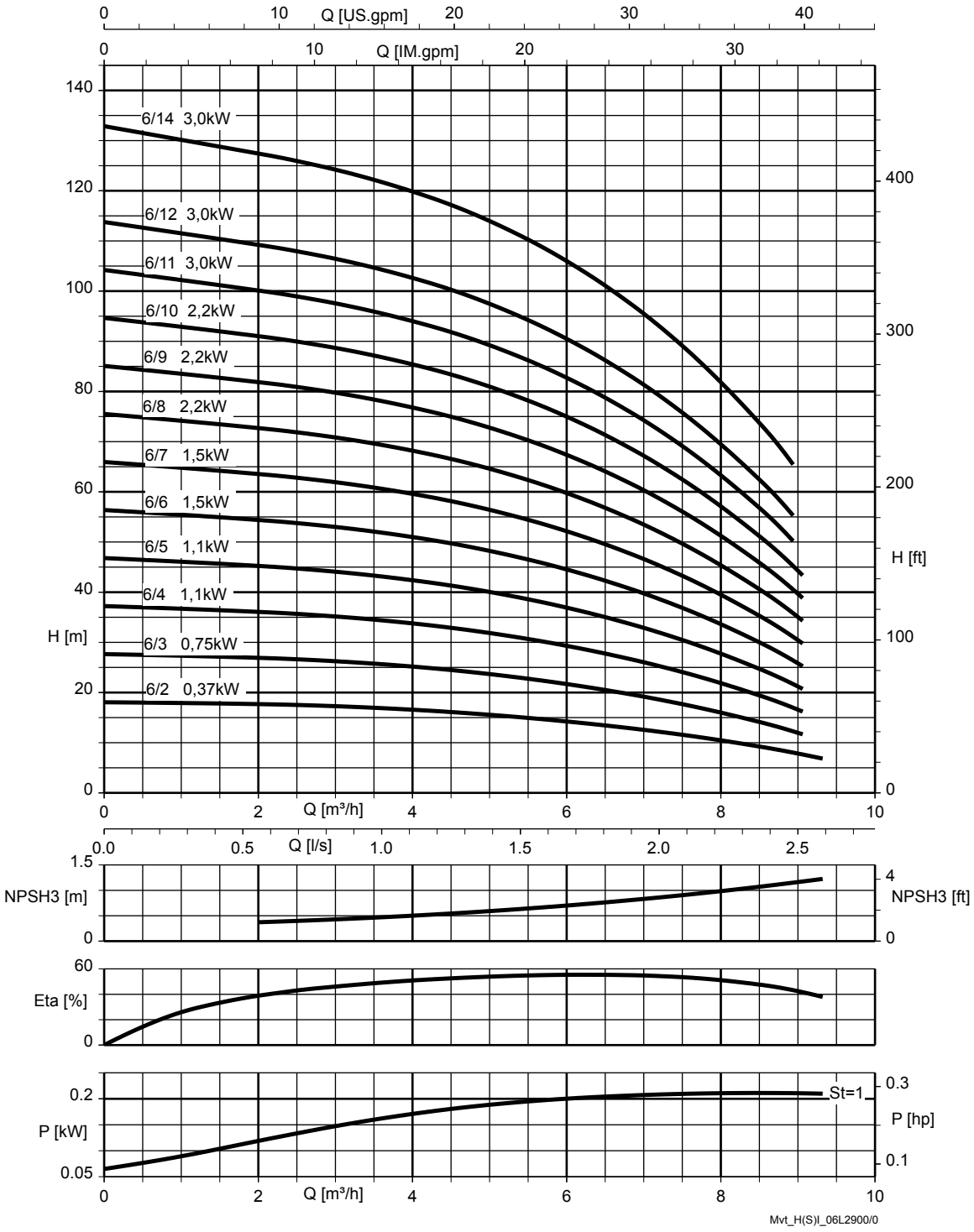


| | |
|---|---|
| St = 1 | P per stage |

**Movitec H(S)I, 10B, n = 2900 rpm**

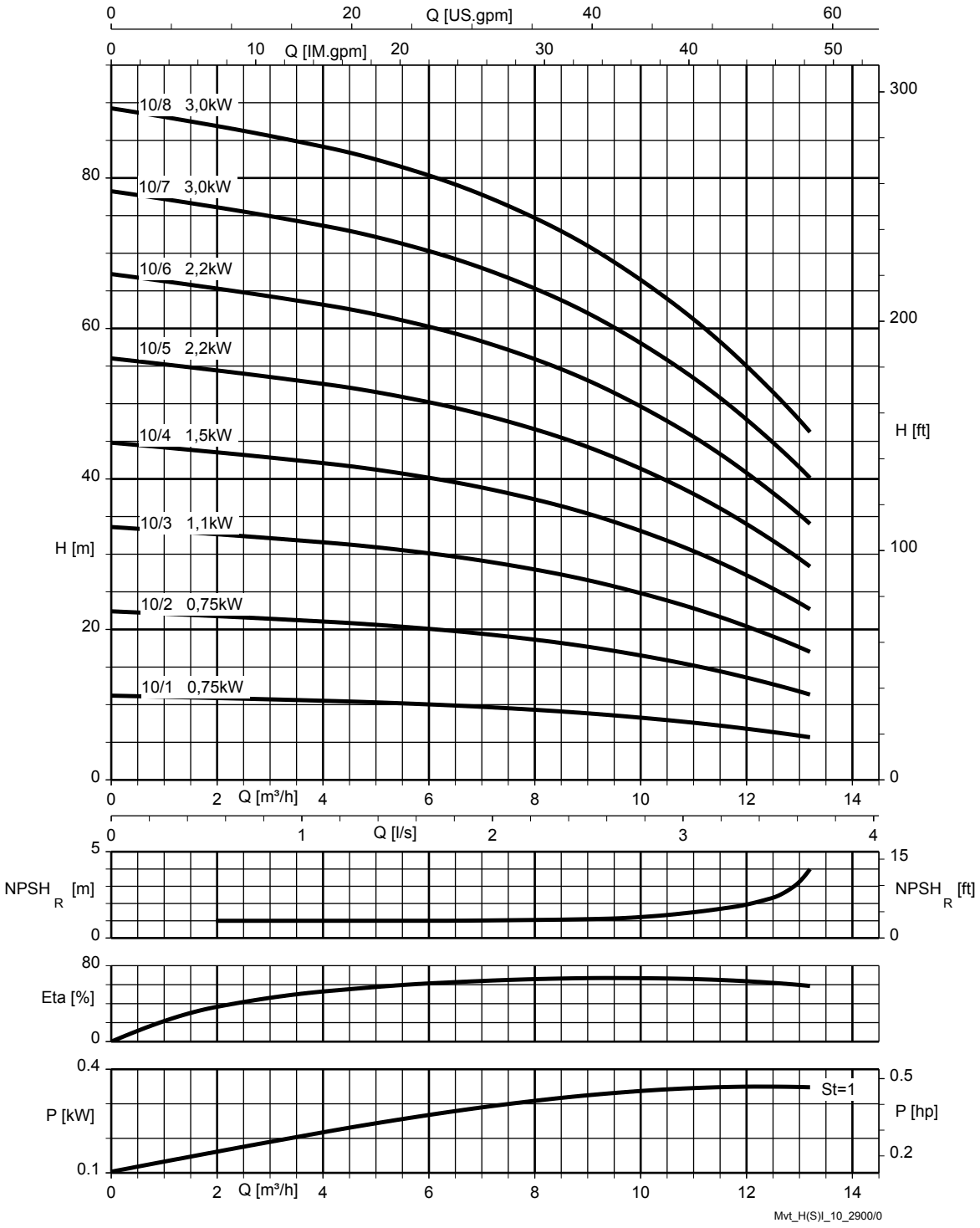


| | |
|---|---|
| St = 1 | P per stage |

**Movitec H(S)I, 10-LB, n = 2900 rpm**

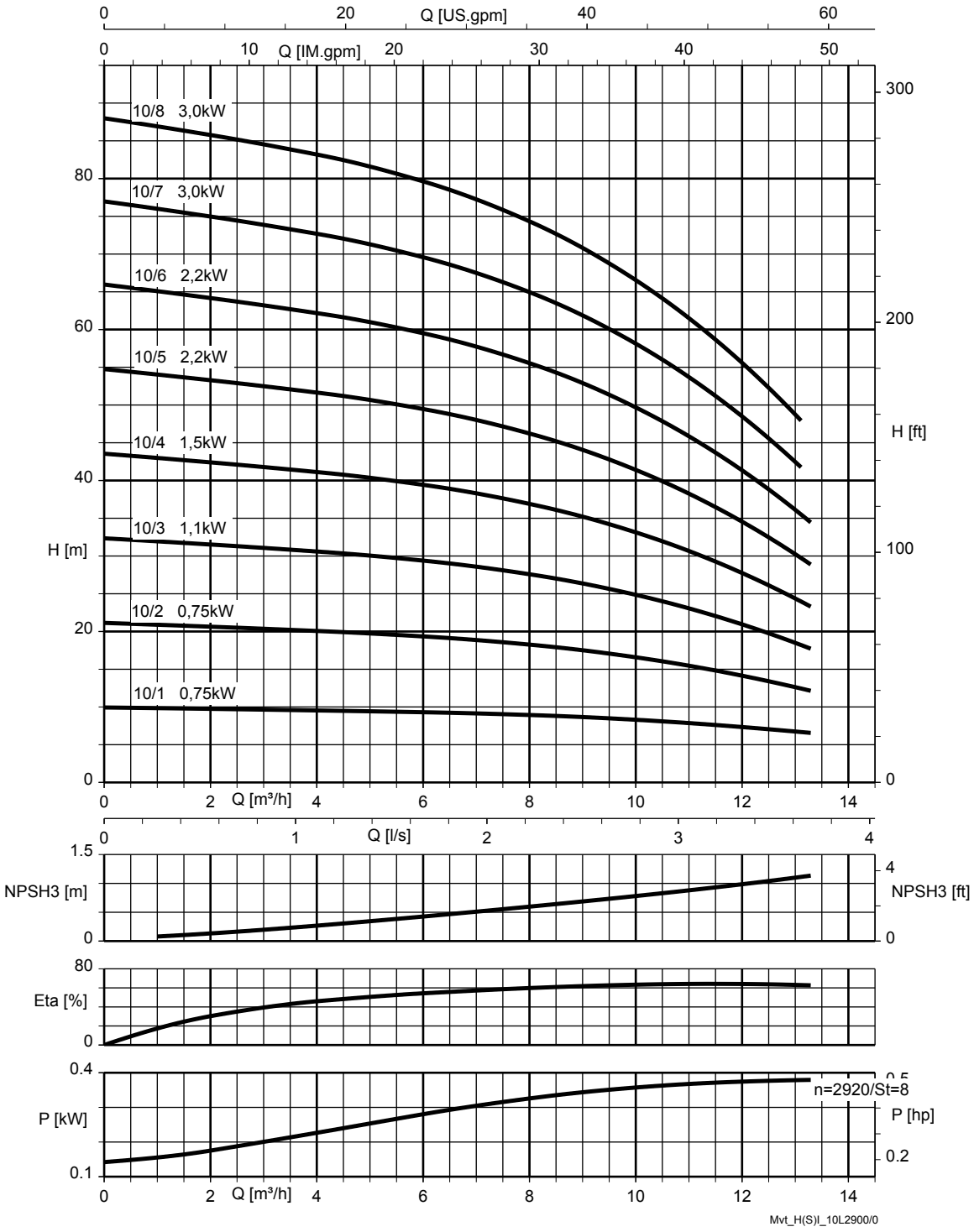


| | |
|---|---|
| St = 1 | P per stage |

**Movitec H(S)I, 15B, n = 2900 rpm**

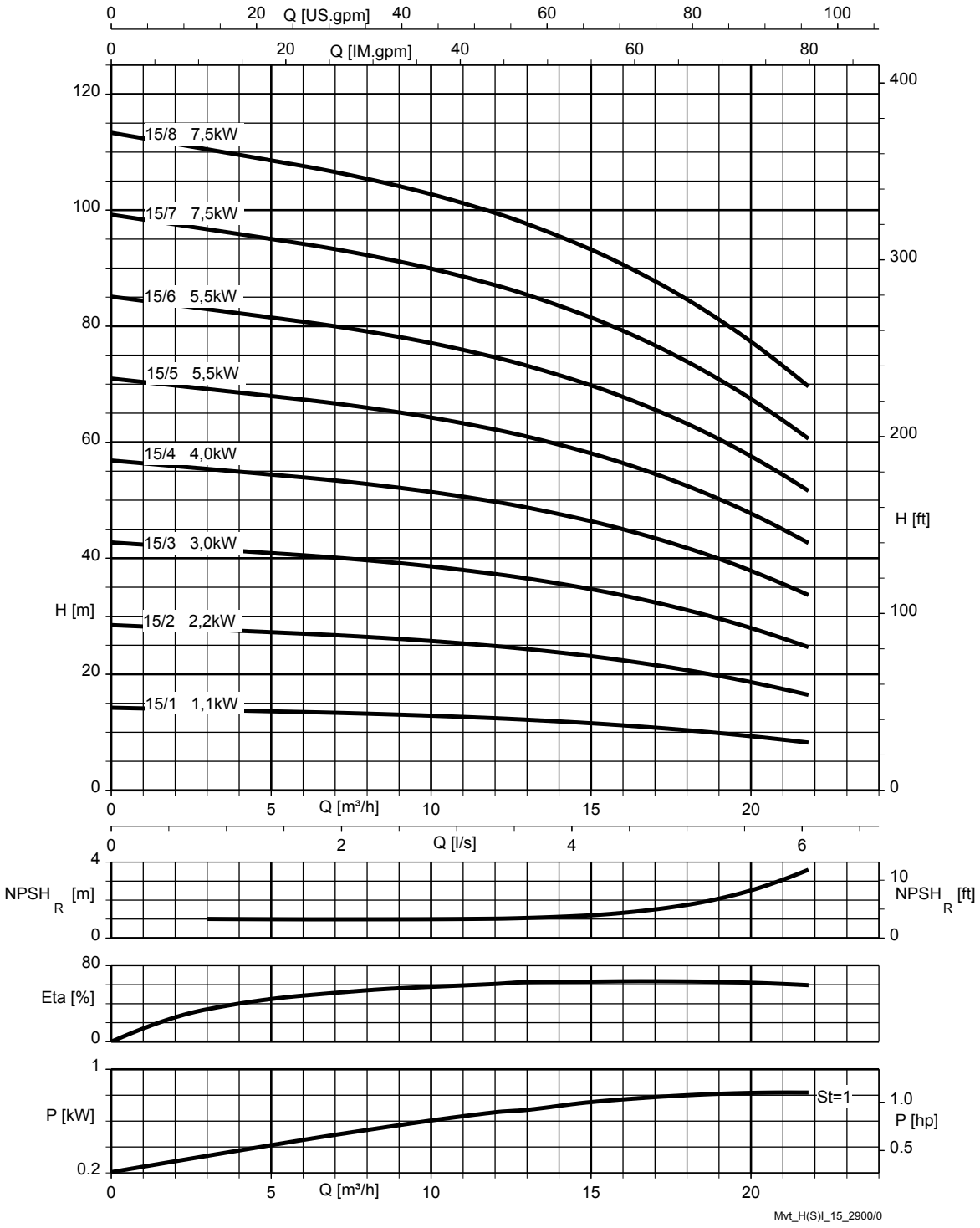


| | |
|---|---|
| St = 1 | P per stage |

**Movitec H(S)I, 15-LB, n = 2900 rpm**

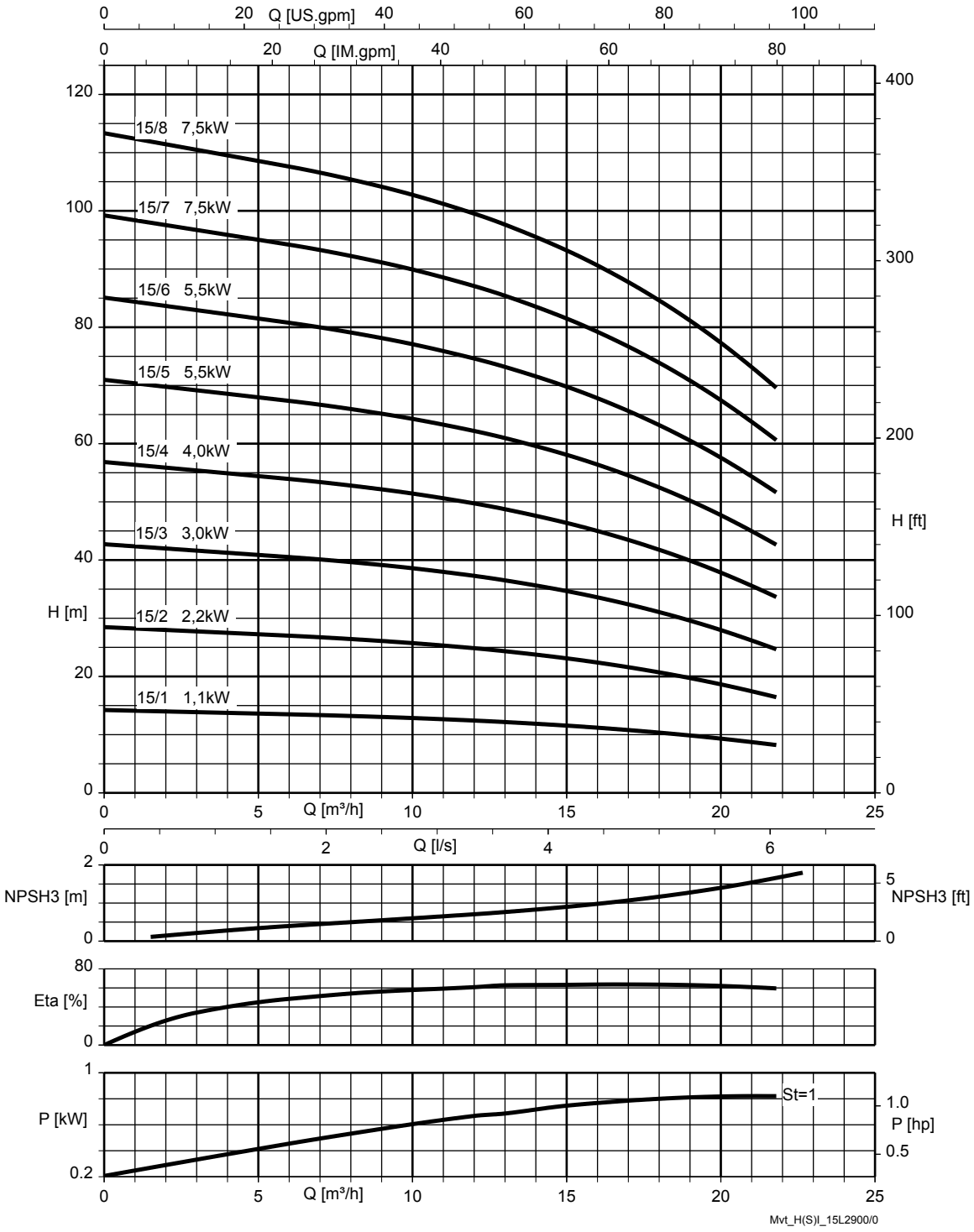


| | |
|---|---|
| St = 1 | P per stage |

**n = 1450 rpm**

**Movitec H(S)I, 10B, n = 1450 rpm**

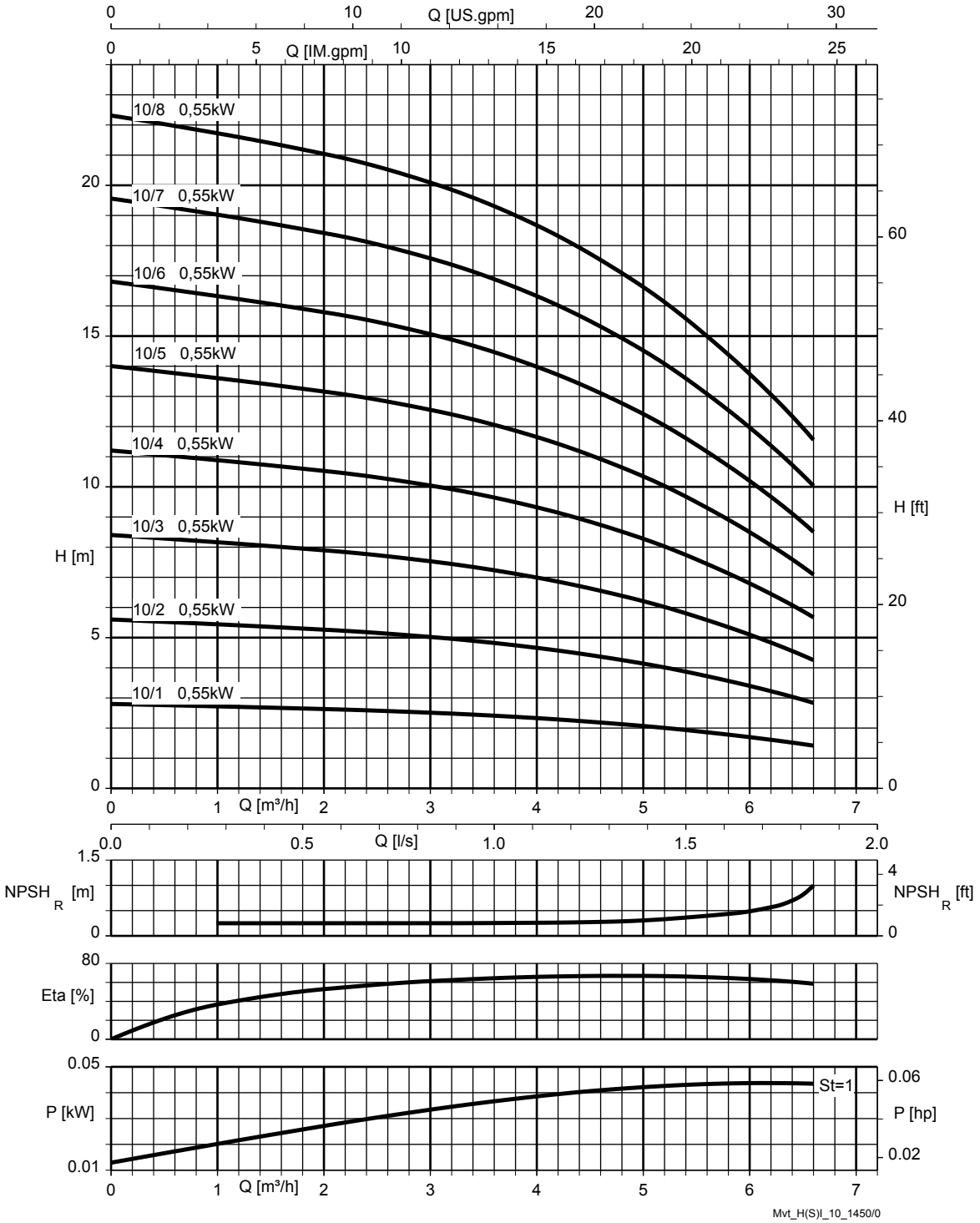


| | |
|---|---|
| St = 1 | P per stage |

**Movitec H(S)I, 10-LB, n = 1450 rpm**

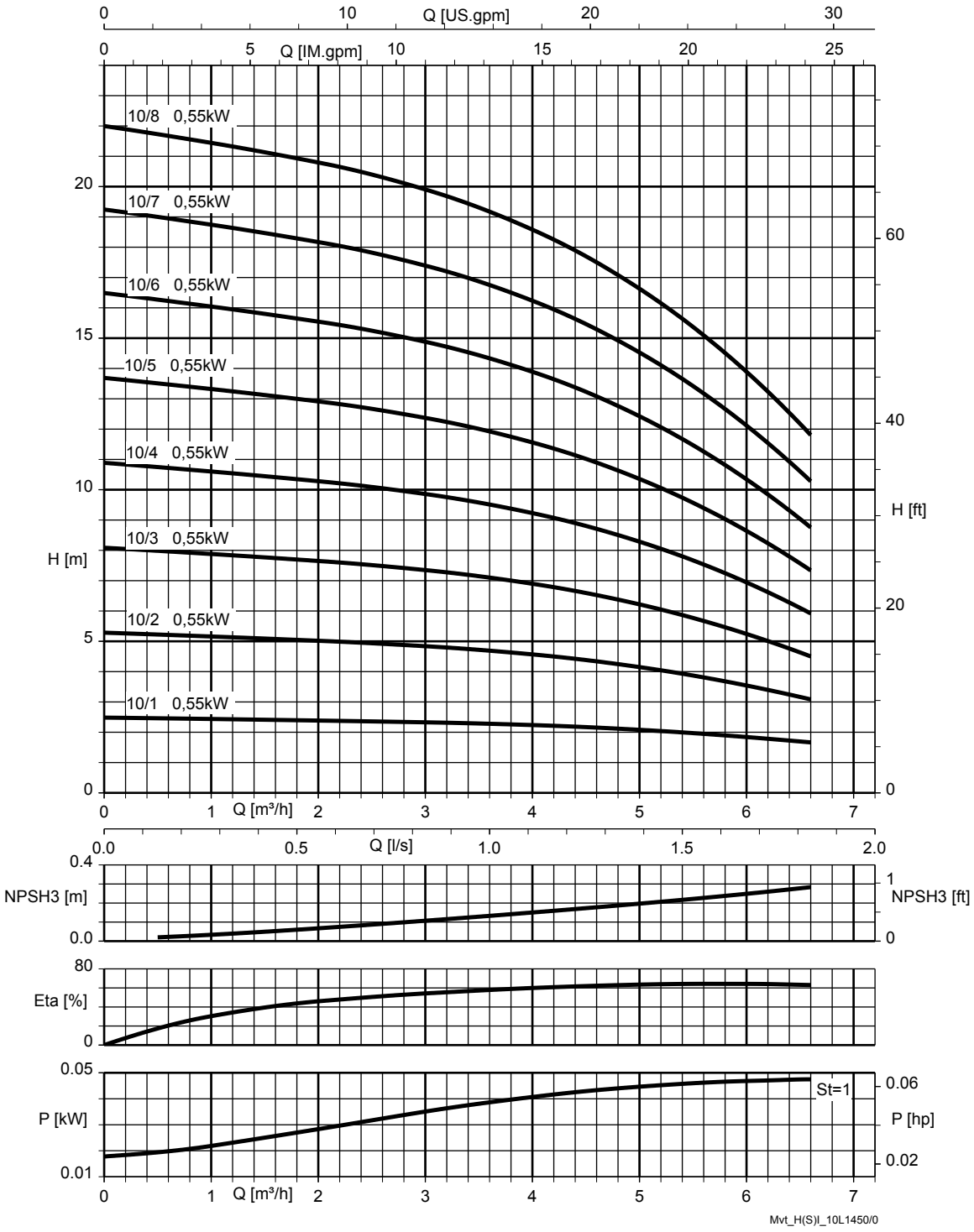


| | |
|---|---|
| St = 1 | P per stage |

**Movitec H(S)I, 15B, n = 1450 rpm**

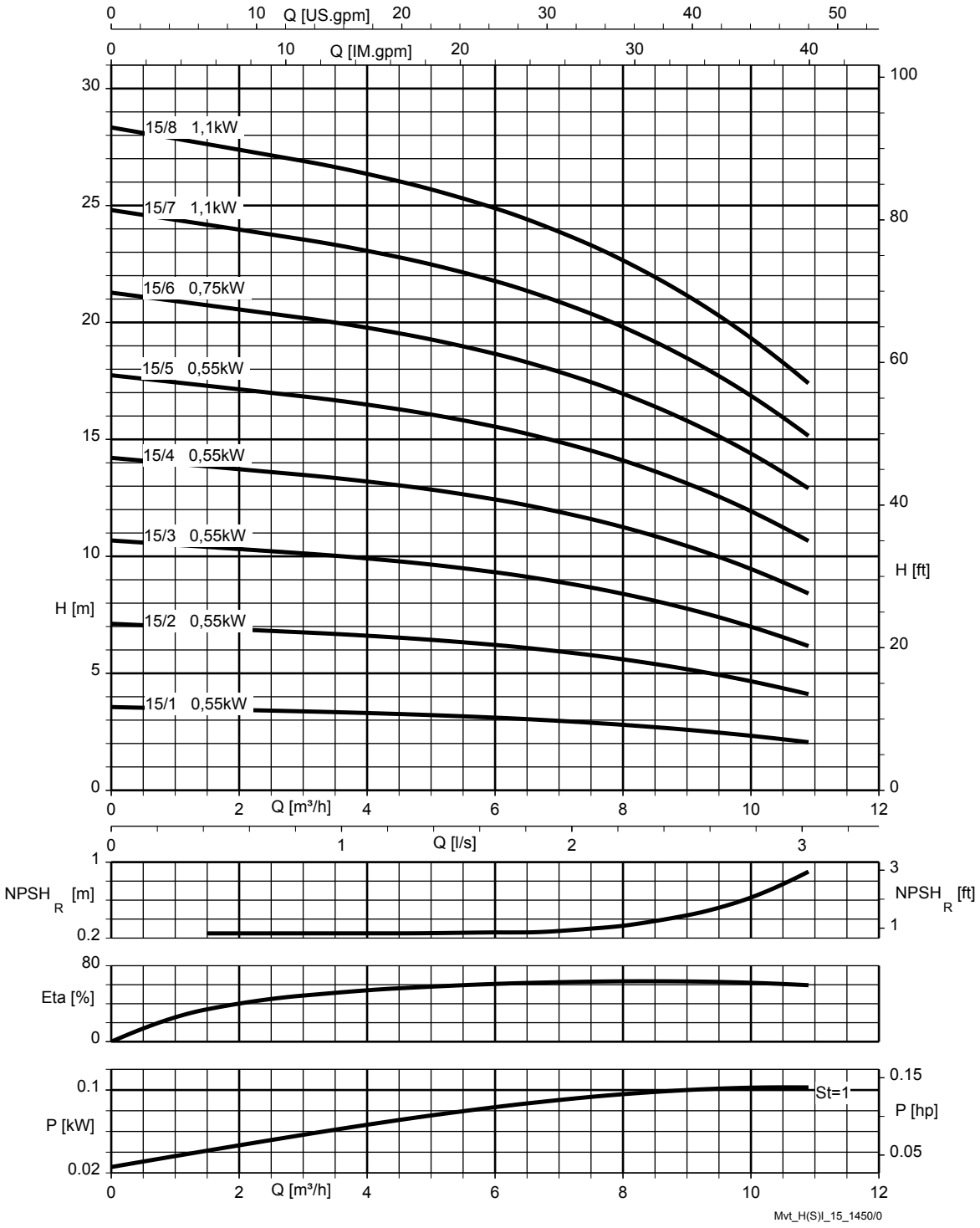


| | |
|---|---|
| St = 1 | P per stage |

**Movitec H(S)I, 15-LB, n = 1450 rpm**

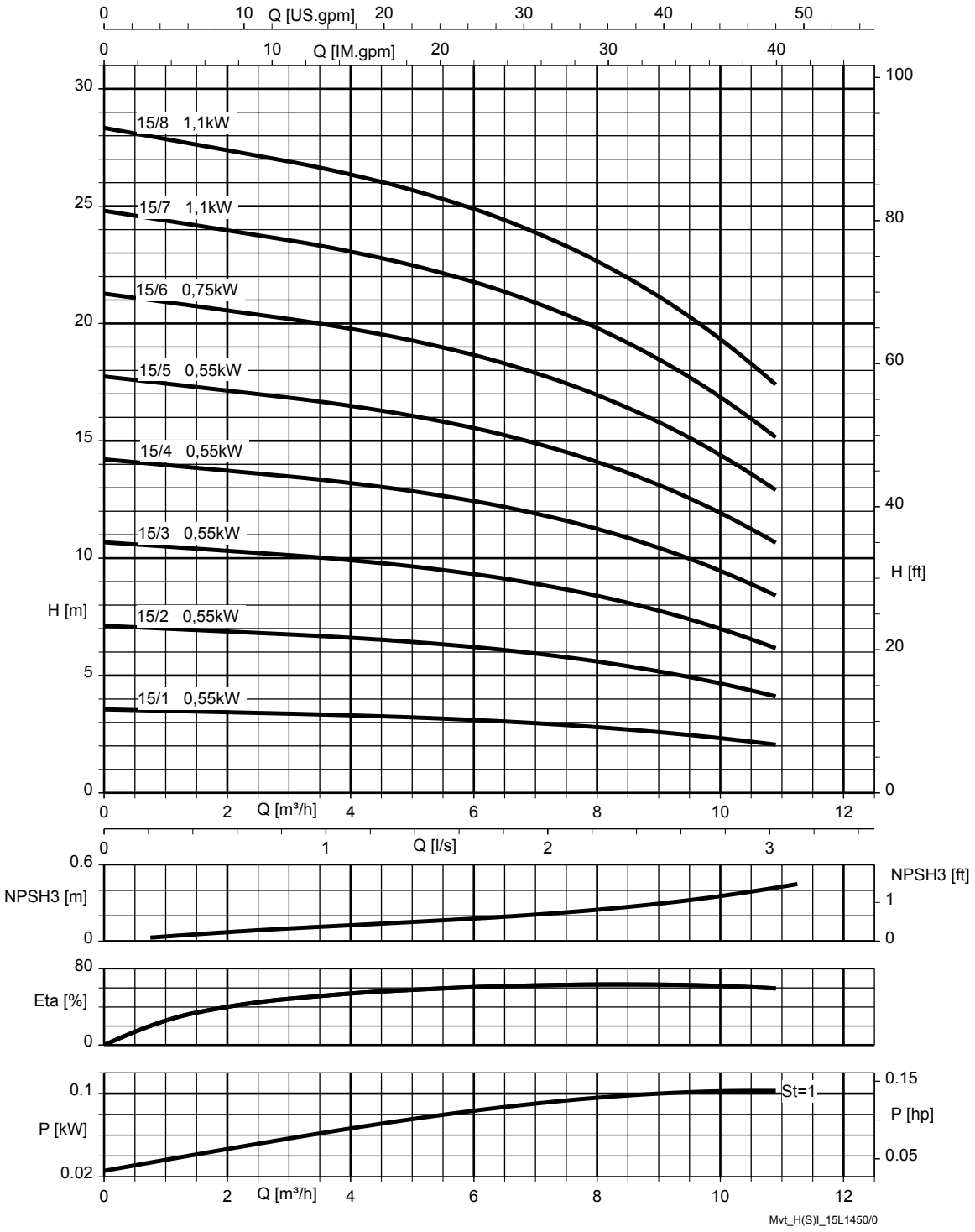


| | |
|---|---|
| St = 1 | P per stage |

**n = 3500 rpm**

**Movitec H(S)I, 2B, n = 3500 rpm**

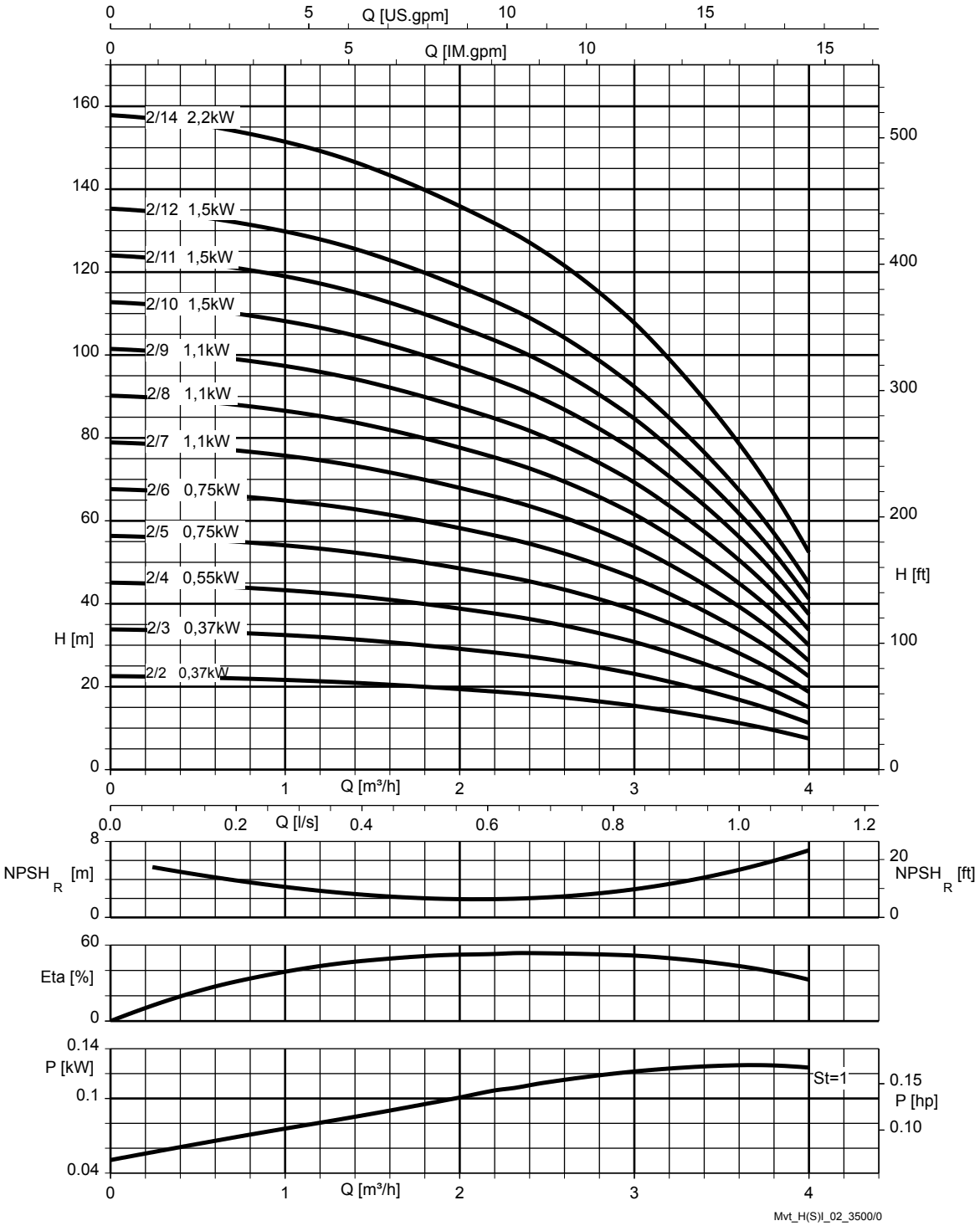


| | |
|---|---|
| St = 1 | P per stage |

**Movitec H(S)I, 2-LB, n = 3500 rpm**

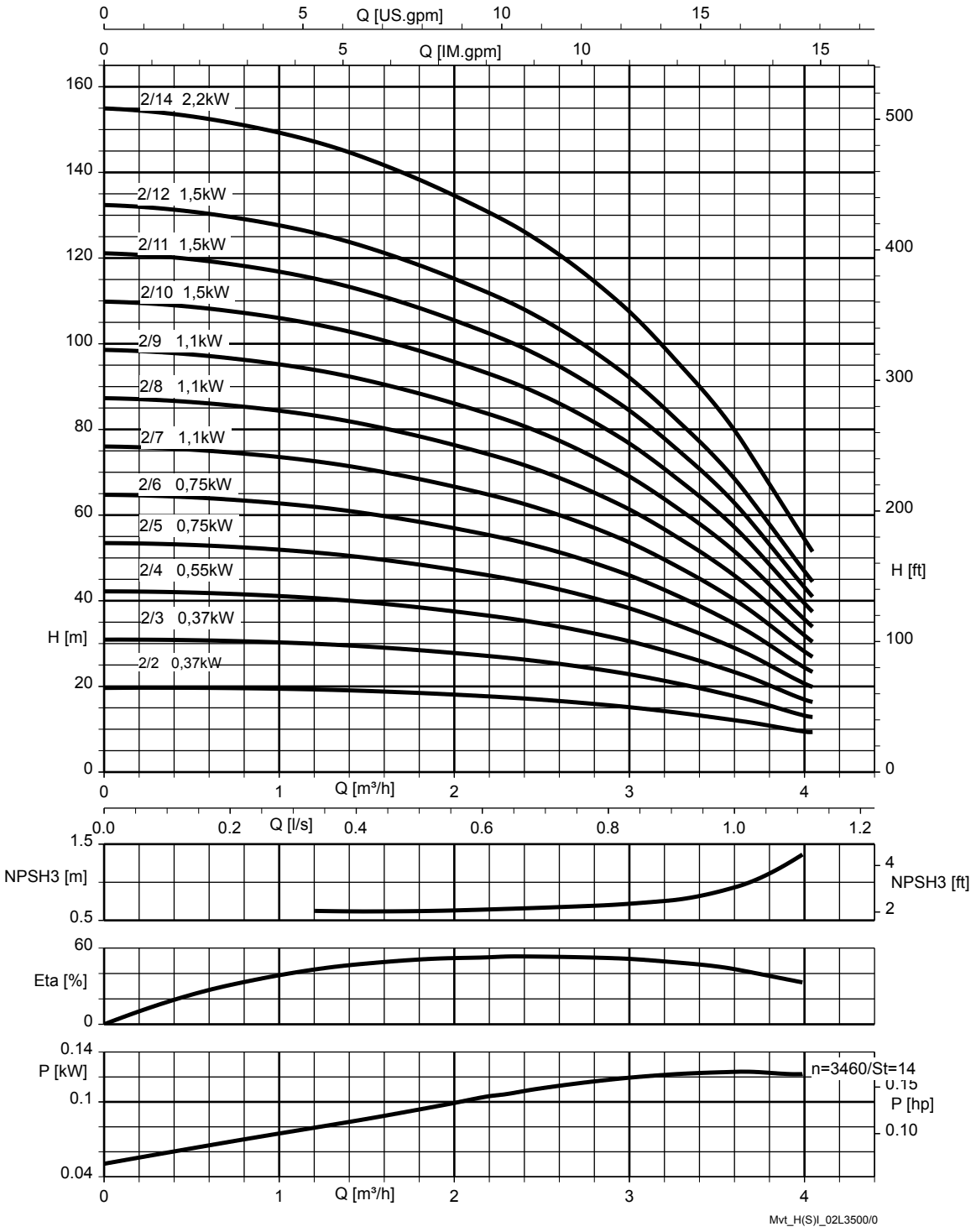


| | |
|---|---|
| St = 1 | P per stage |

**Movitec H(S)I, 4B, n = 3500 rpm**

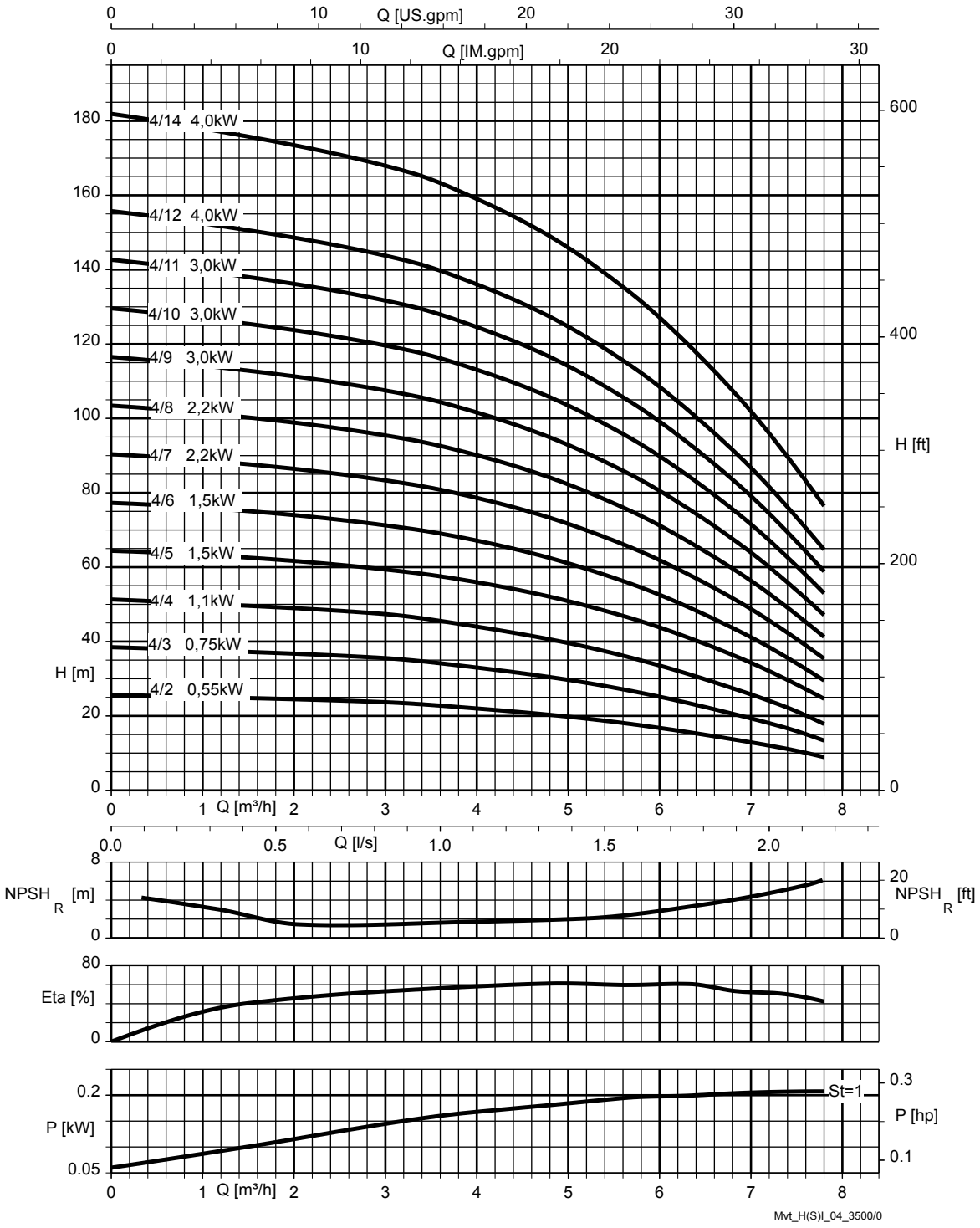


| | |
|---|---|
| St = 1 | P per stage |

**Movitec H(S)I, 4-LB, n = 3500 rpm**

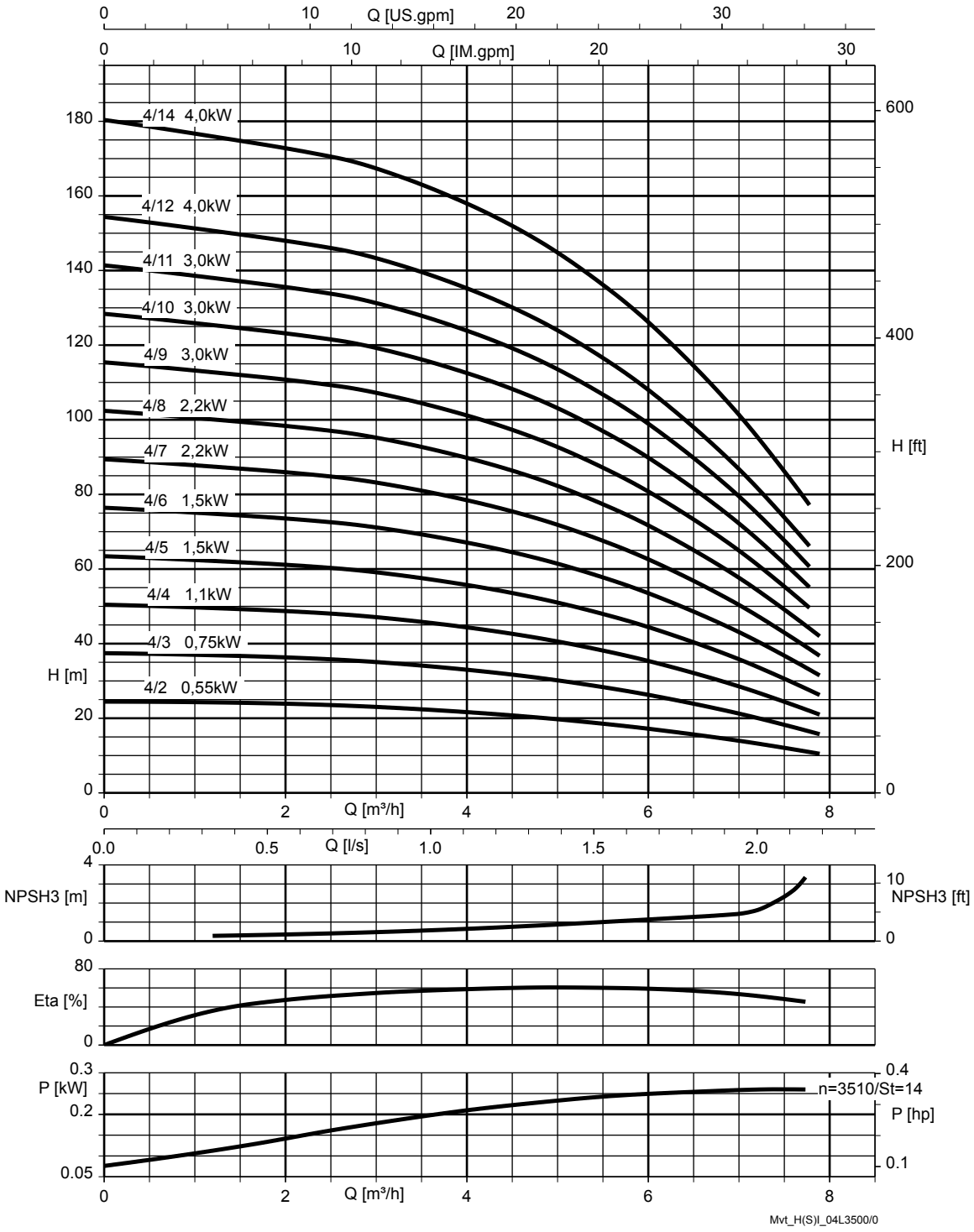


| | |
|---|---|
| St = 1 | P per stage |

**Movitec H(S)I, 6B, n = 3500 rpm**

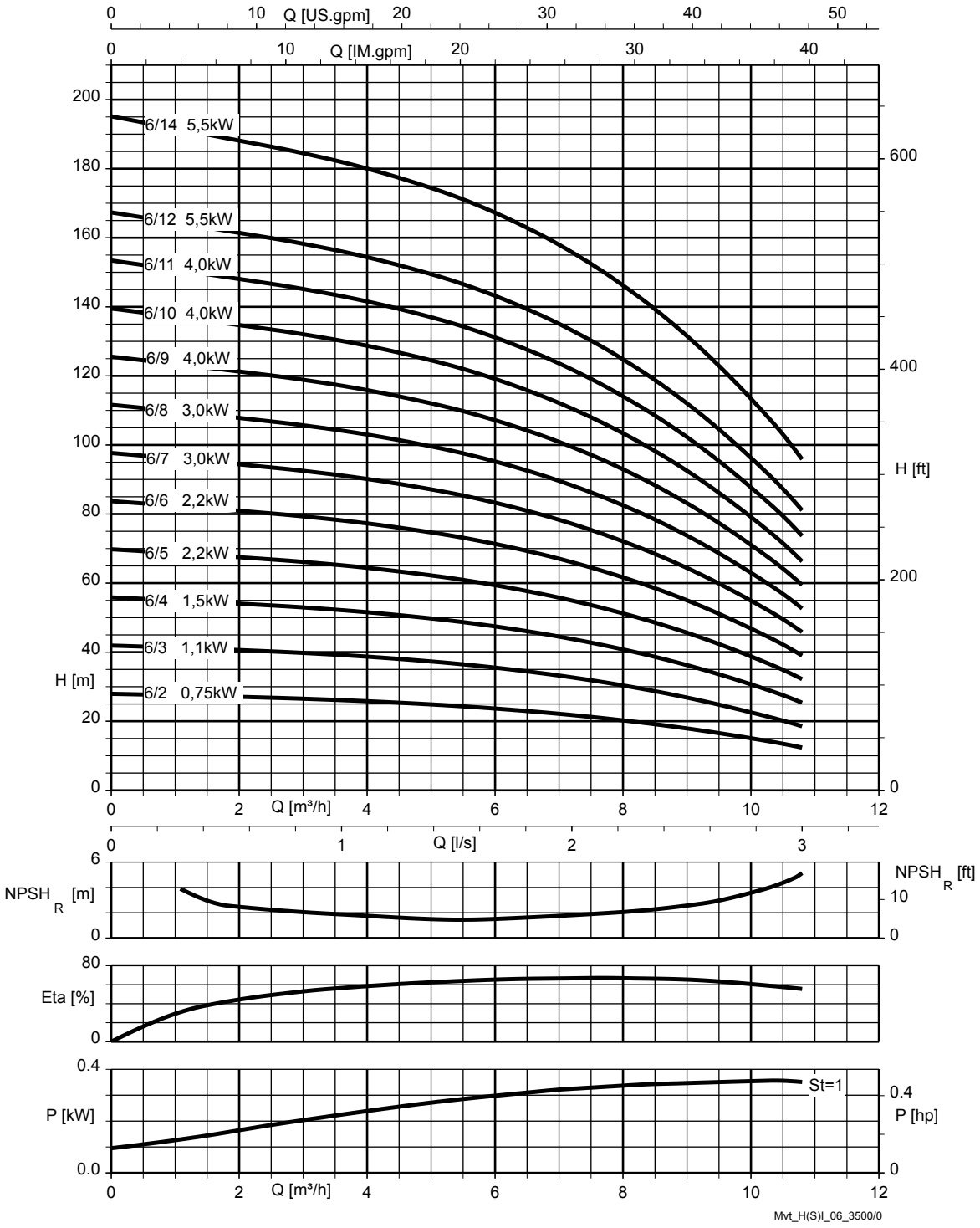


| | |
|---|---|
| St = 1 | P per stage |

**Movitec H(S)I, 6-LB, n = 3500 rpm**

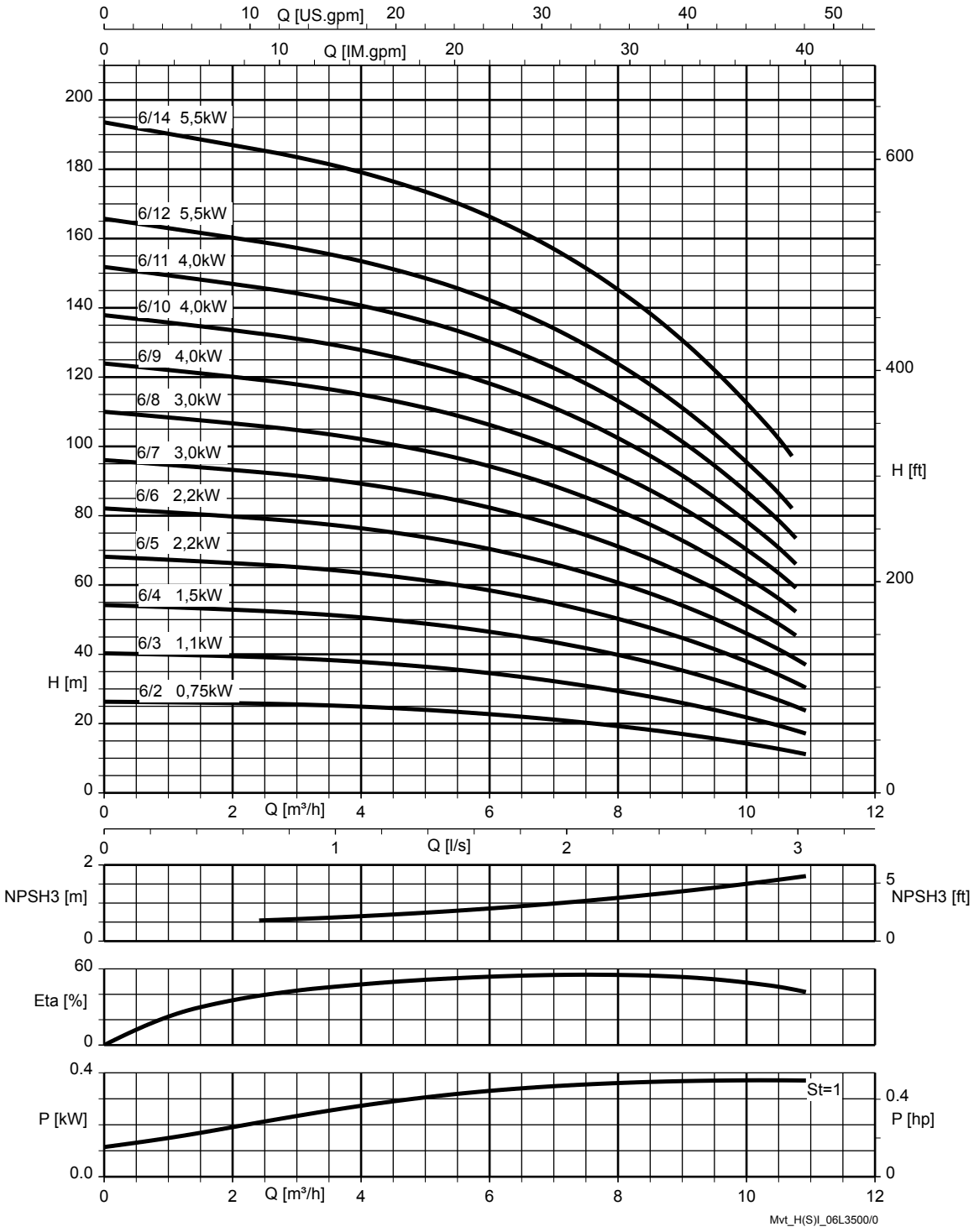


| | |
|---|---|
| St = 1 | P per stage |

**Movitec H(S)I, 10B, n = 3500 rpm**

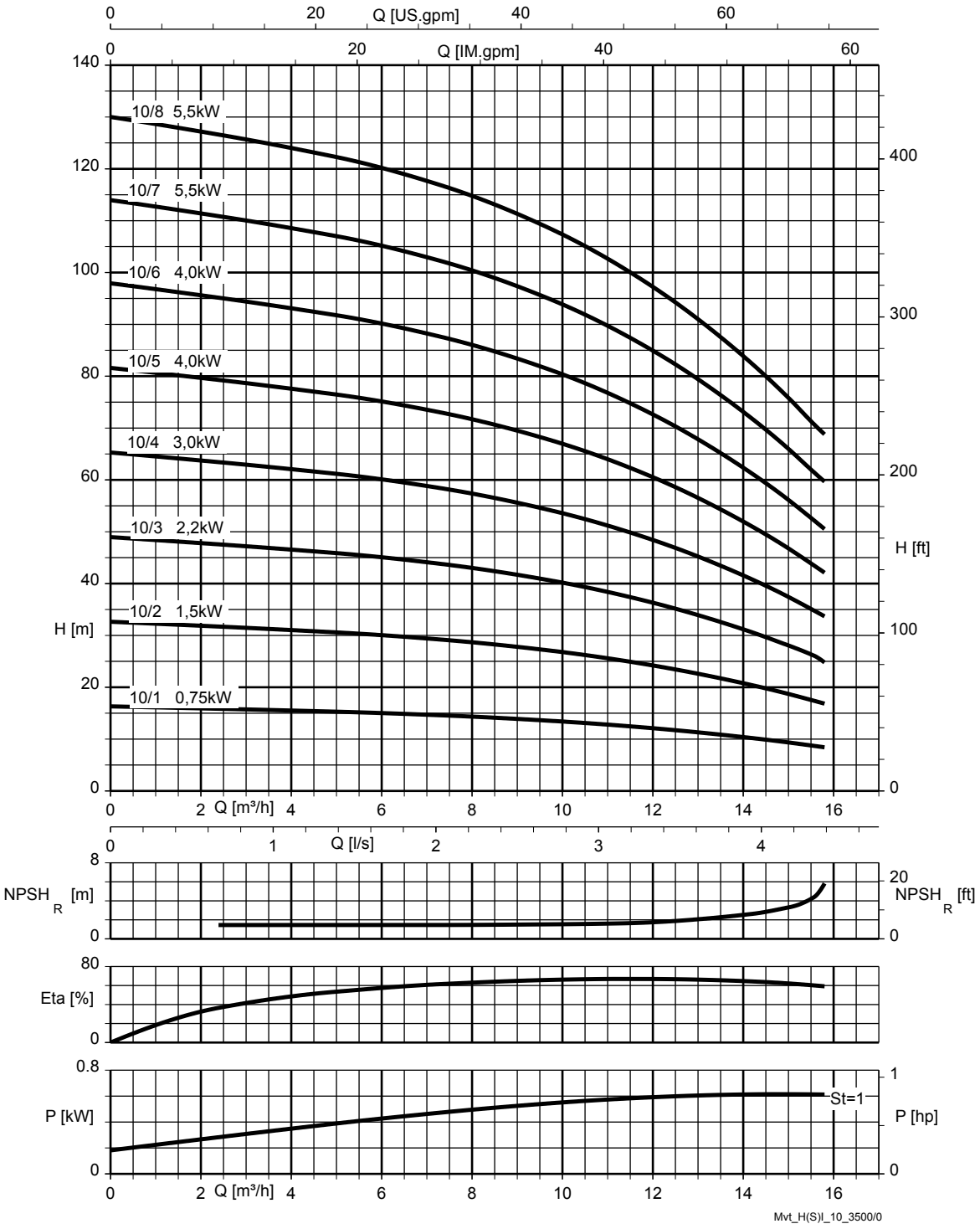


| | |
|---|---|
| St = 1 | P per stage |

**Movitec H(S)I, 10-LB, n = 3500 rpm**

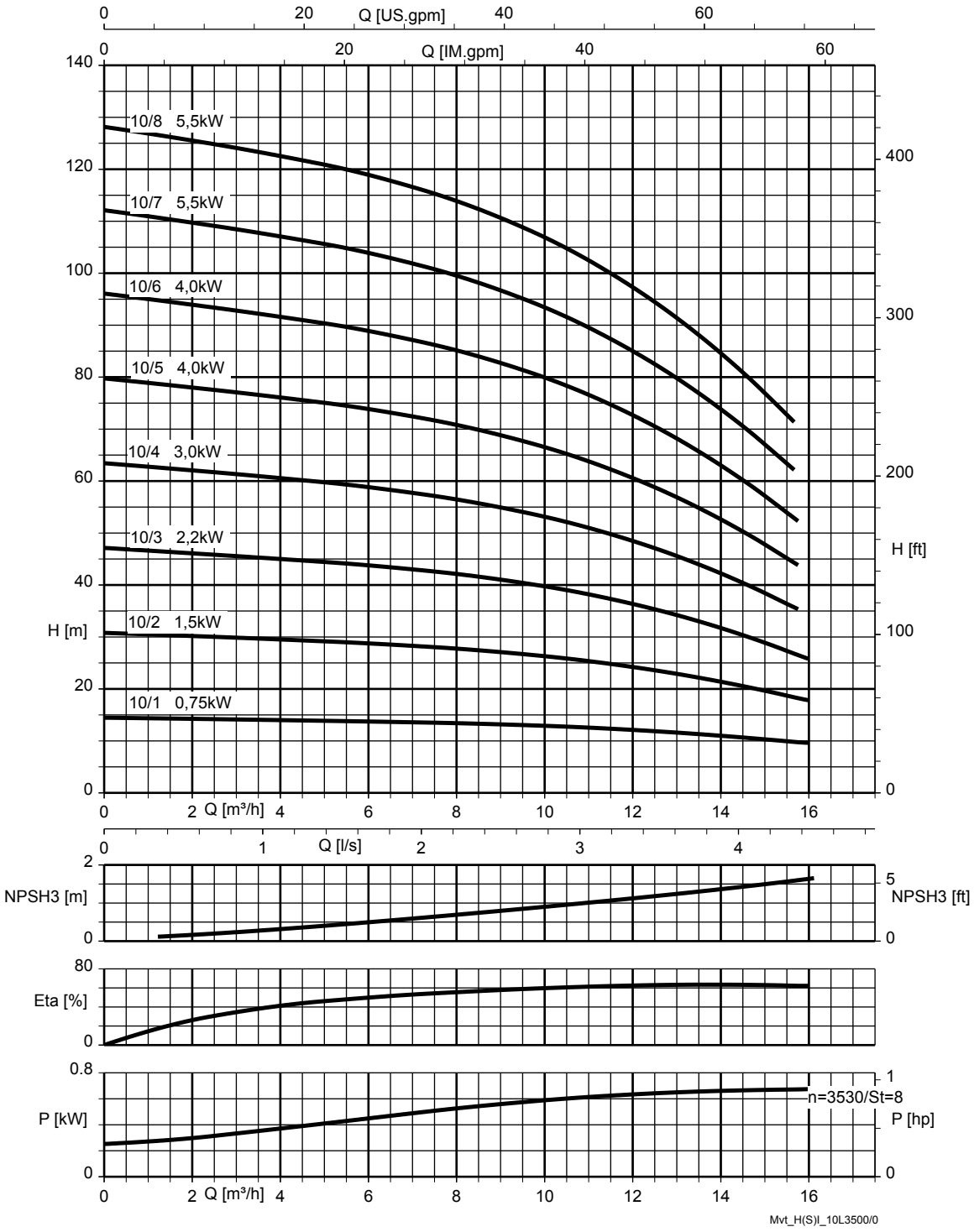


| | |
|---|---|
| St = 1 | P per stage |

**Movitec H(S)I, 15B, n = 3500 rpm**

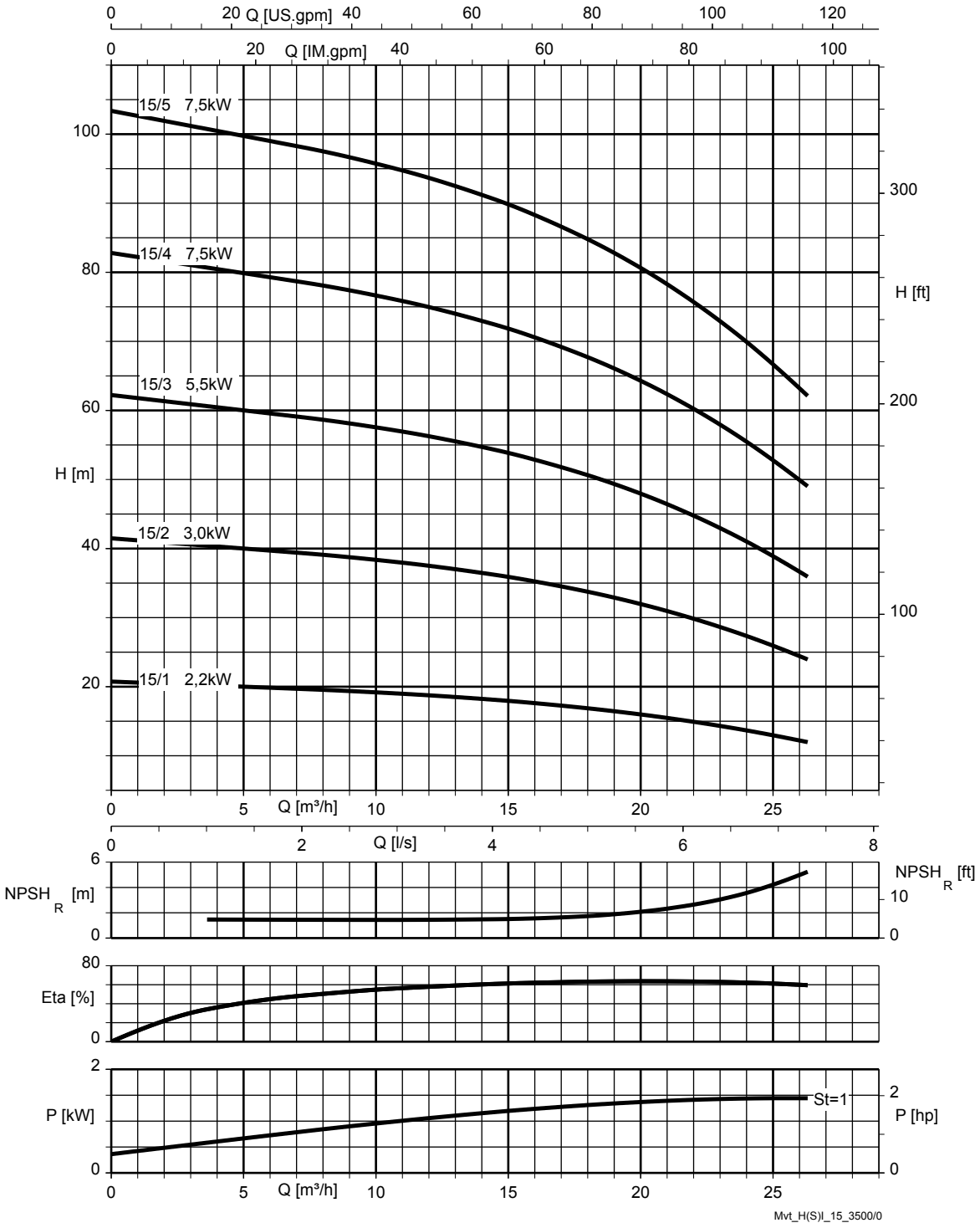


| | |
|---|---|
| St = 1 | P per stage |

**Movitec H(S)I, 15-LB, n = 3500 rpm**

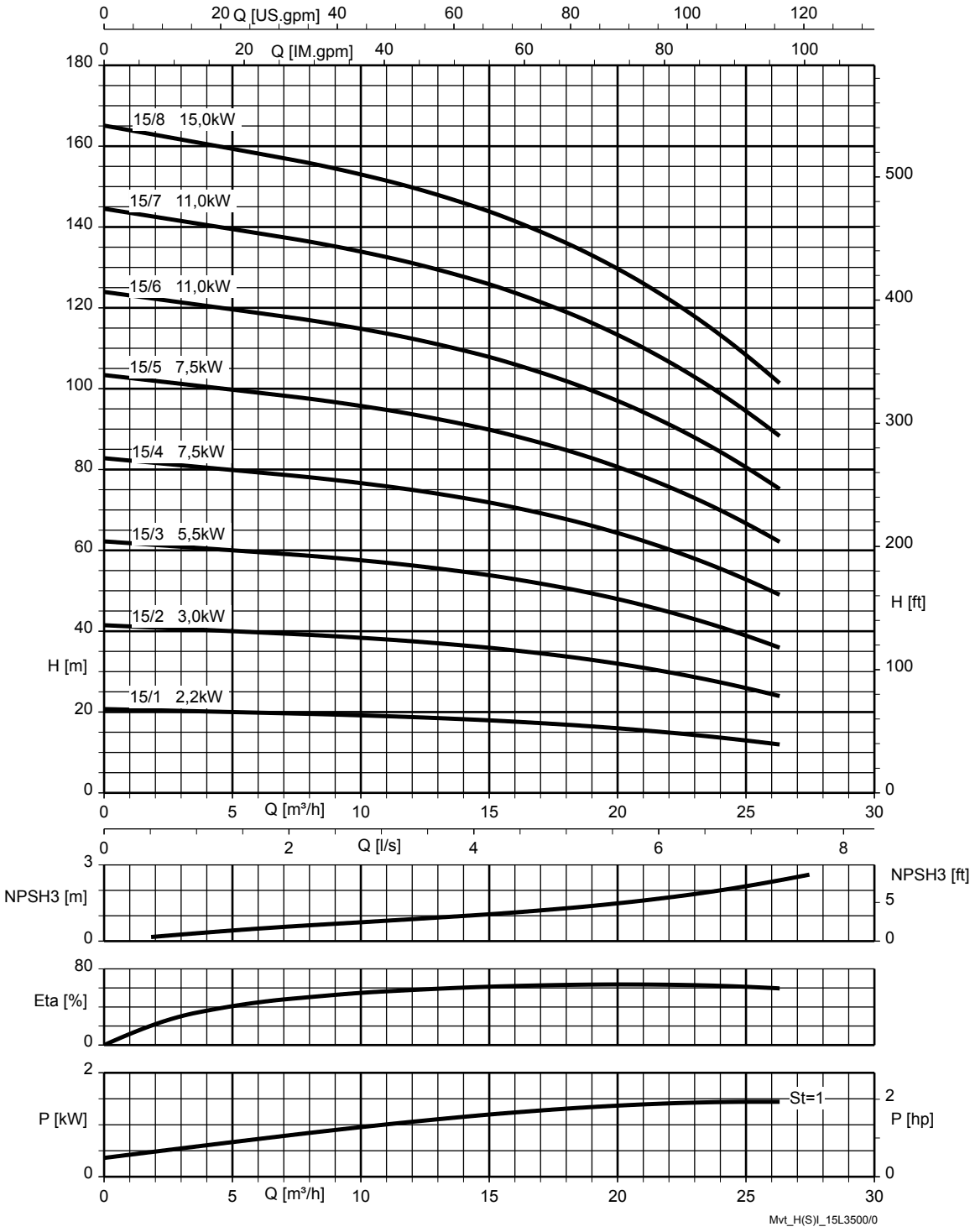


| | |
|---|---|
| St = 1 | P per stage |

**n = 1750 rpm**

**Movitec H(S)I, 10B, n = 1750 rpm**

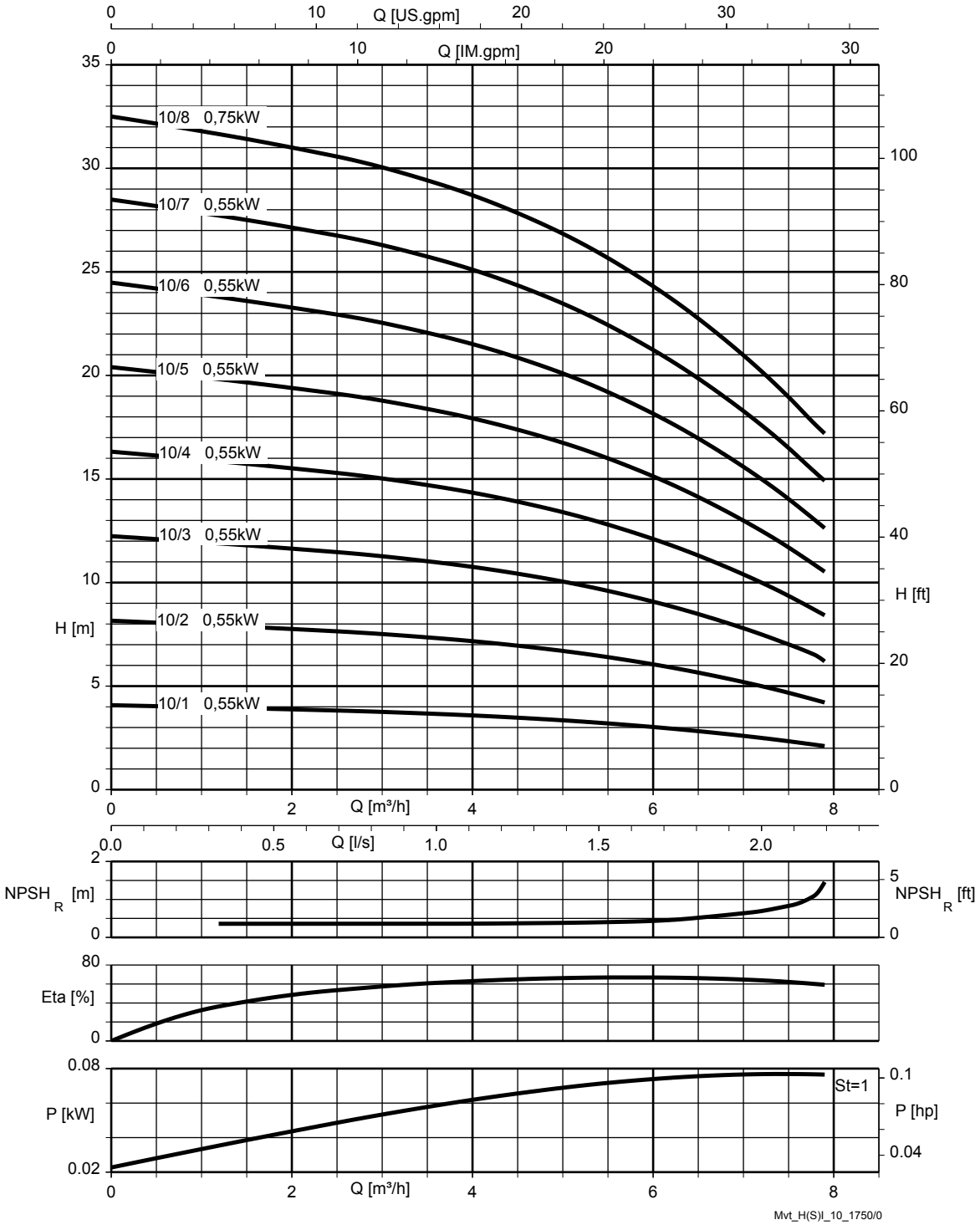


| | |
|---|---|
| St = 1 | P per stage |

**Movitec H(S)I, 10-LB, n = 1750 rpm**

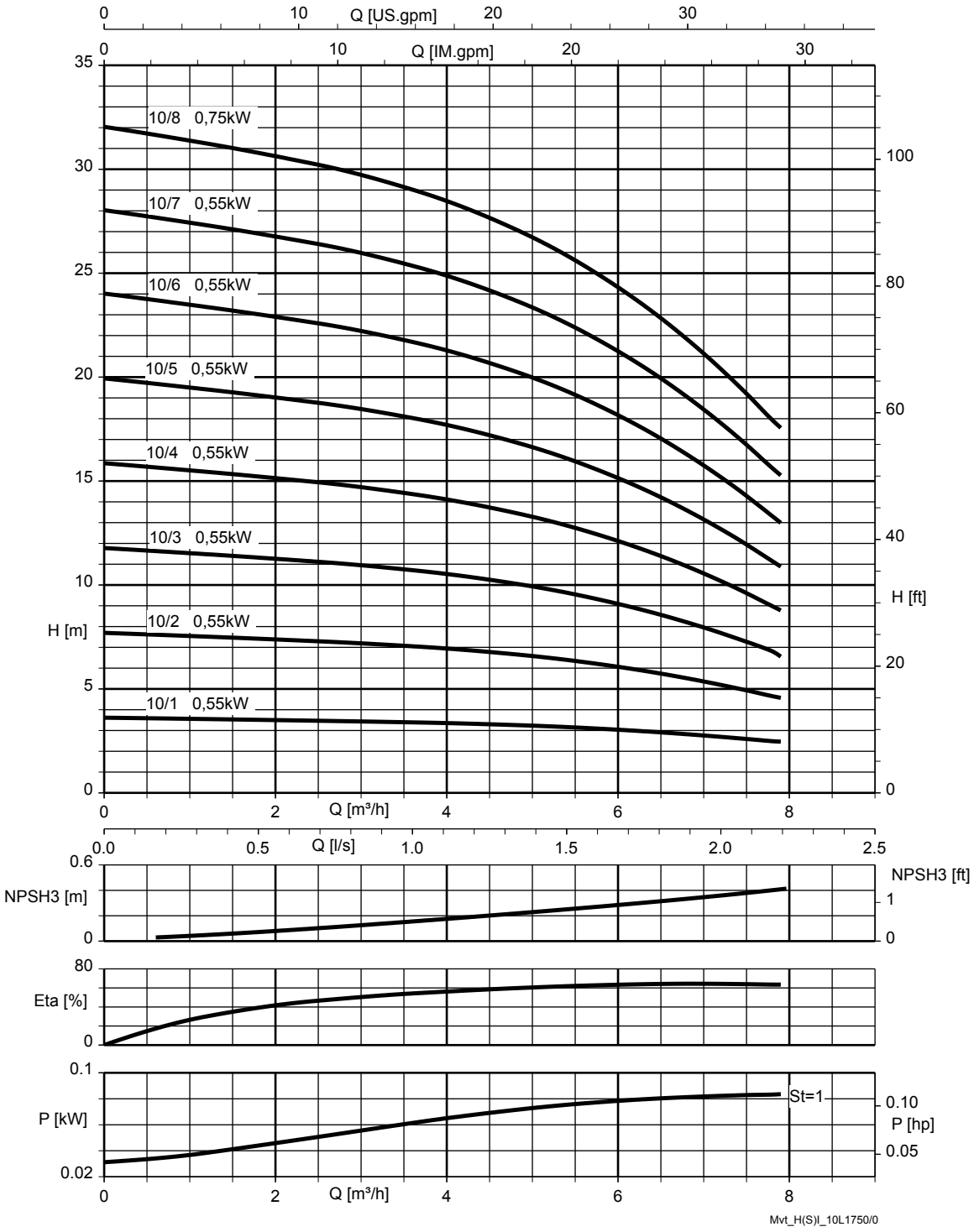


| | |
|---|---|
| St = 1 | P per stage |

## Movitec H(S)I, 15B, n = 1750 rpm

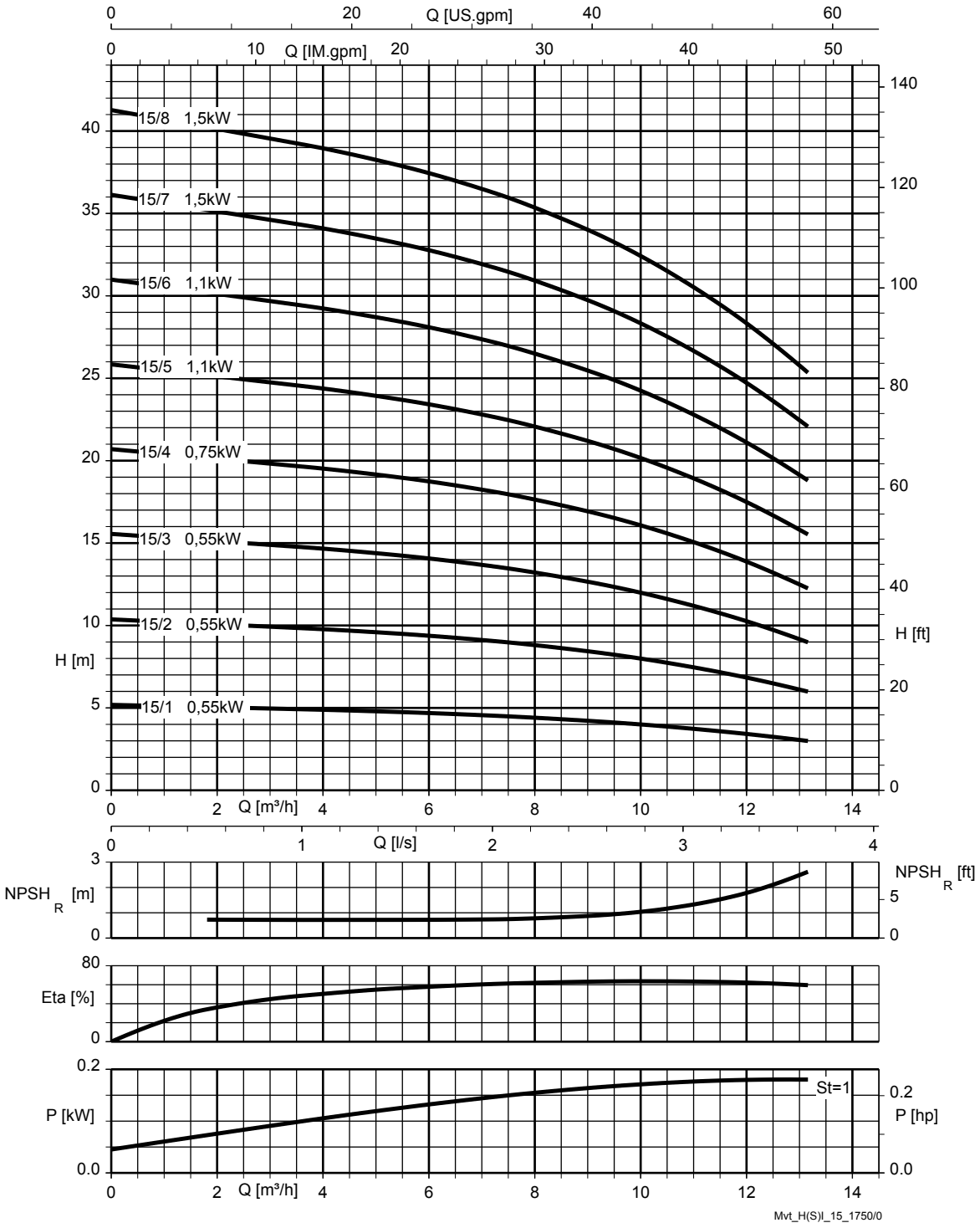


| | |
|---|---|
| St = 1 | P per stage |

**Movitec H(S)I, 15-LB, n = 1750 rpm**

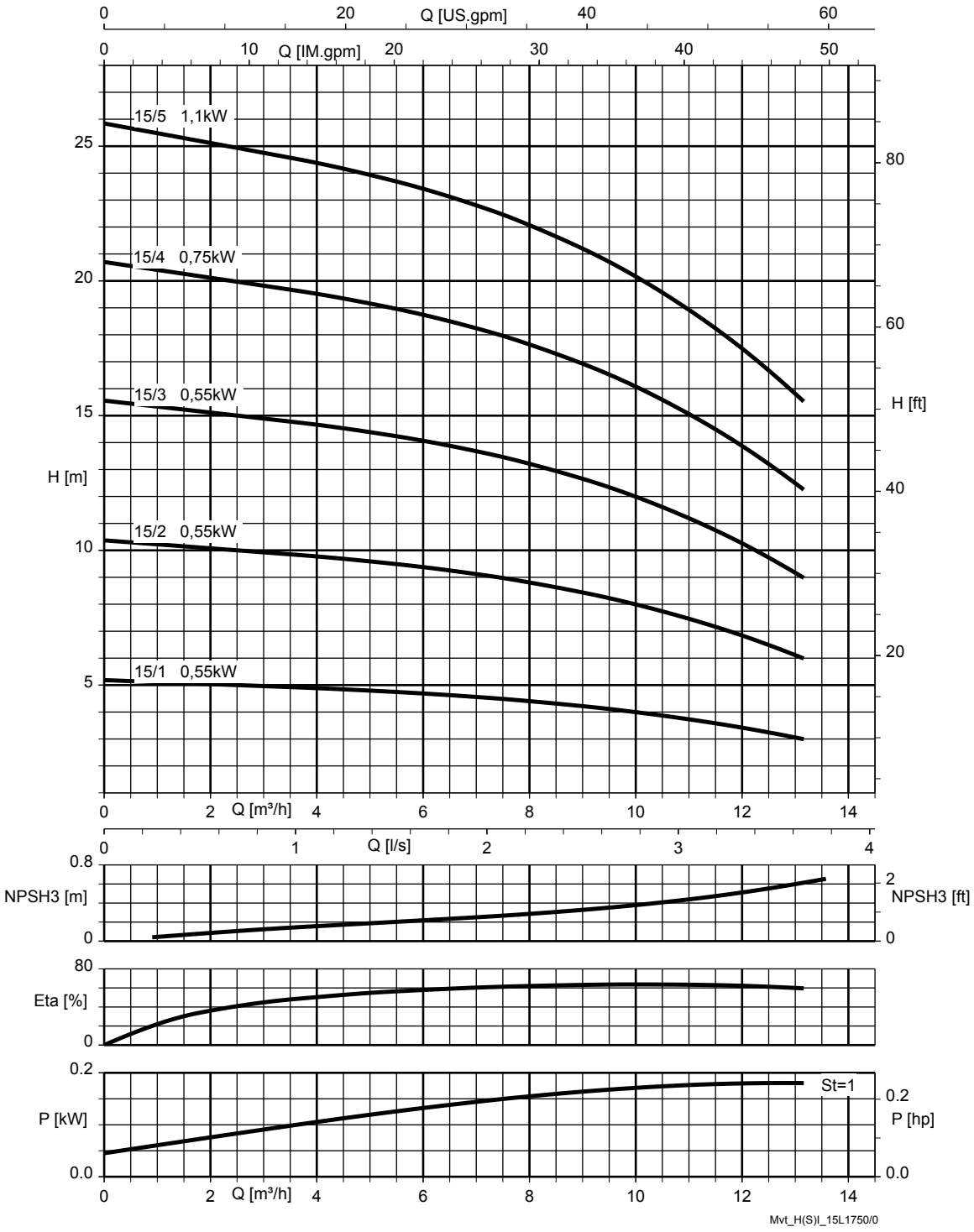


| | |
|---|---|
| St = 1 | P per stage |

## Installation types

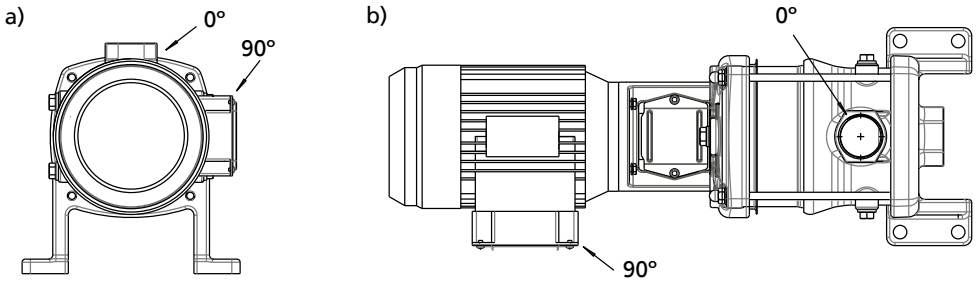


**Fig. 4:** Standard installation type a) Side view (seen from the motor) b) Top view

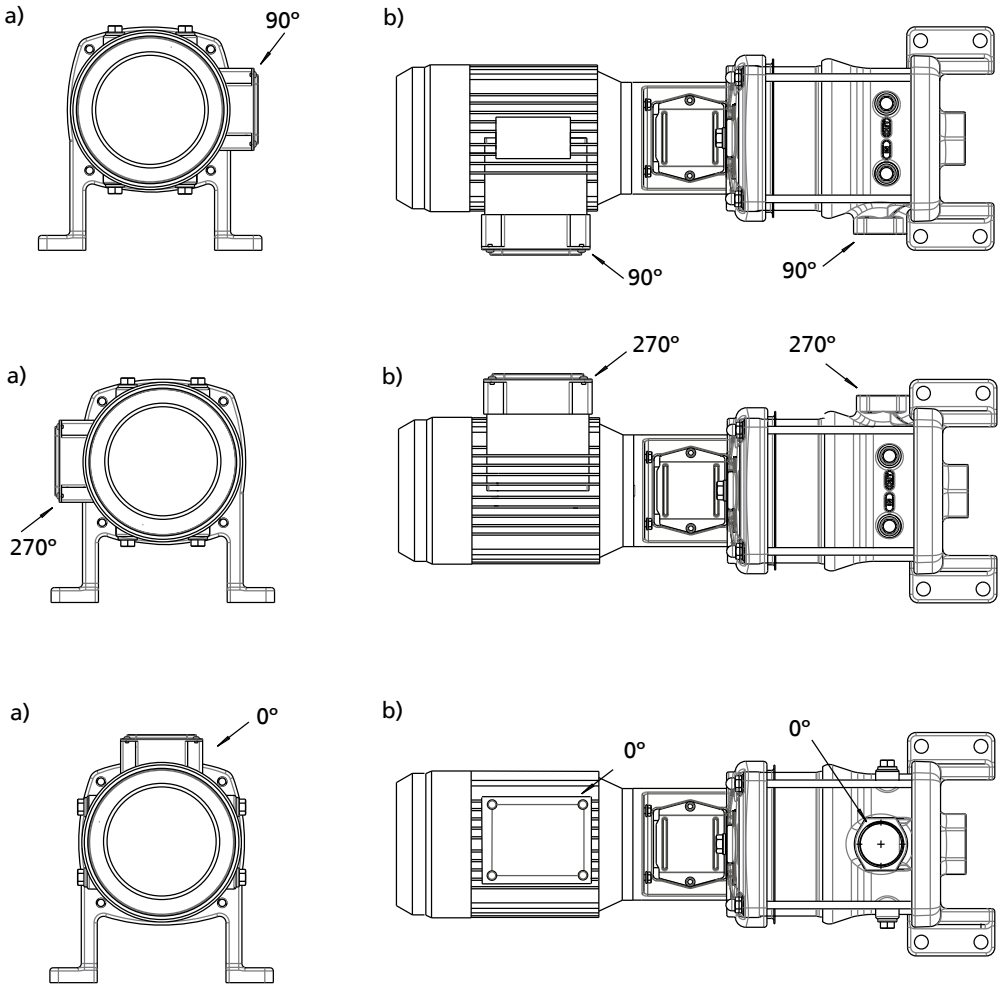


**Fig. 5:** Optional installation types for terminal box position = position discharge side connection a) Side view (seen from the motor) b) Top view

## Dimensions and connections

### Movitec H(S)I 2B, n = 2900 rpm

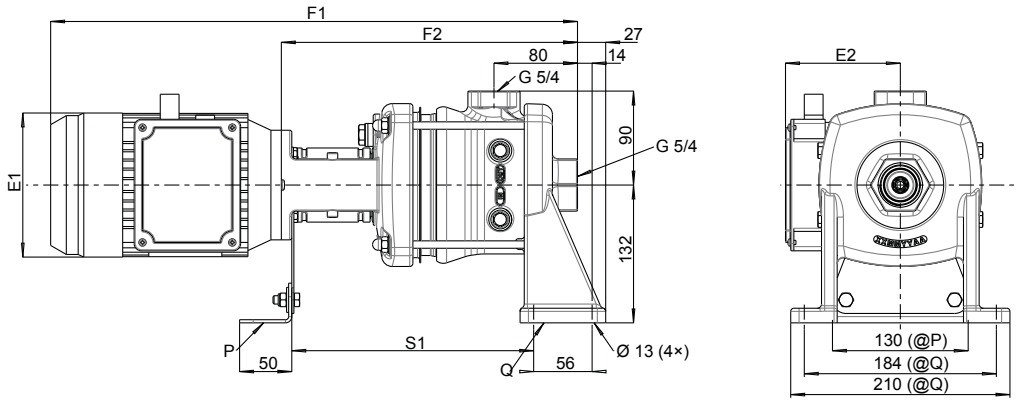


**Fig. 6:** Dimensions and connections of Movitec H(S)I 2 with V18 motor[8)]

Dimensions [mm]

| Number of stages | Motor | E1 | E2 | F1 | F2 | S1 |
|---|---|---|---|---|---|---|
| 2 | V18 | 138 | 109 | 502 | 289 | 236,5 |
| 3 | V18 | 138 | 109 | 523 | 310 | 257,5 |
| 4 | V18 | 138 | 109 | 545 | 332 | 279,5 |
| 5 | V18 | 138 | 109 | 566 | 353 | 300,5 |
| 6 | V18 | 138 | 109 | 588 | 375 | 322,5 |
| 7 | V18 | 138 | 109 | 609 | 396 | 343,5 |
| 8 | V18 | 138 | 109 | 631 | 418 | 365,5 |
| 9 | V18 | 157 | 133 | 706 | 449 | 396,5 |
| 10 | V18 | 157 | 133 | 728 | 471 | 418,5 |
| 11 | V18 | 157 | 133 | 749 | 492 | 439,5 |
| 12 | V18 | 157 | 133 | 771 | 514 | 461,5 |
| 14 | V18 | 157 | 133 | 814 | 557 | 504,5 |

8) Optional: connection height 160 mm

## Movitec H(S)I 2B, n = 3500 rpm

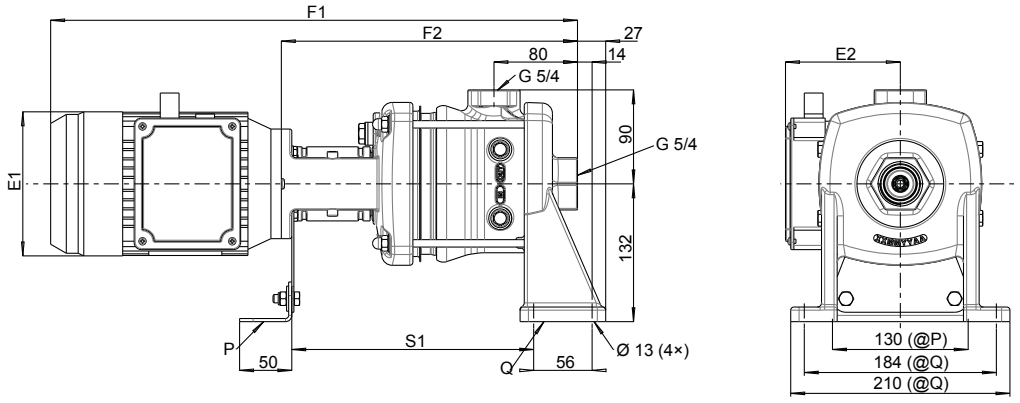


**Fig. 7:** Dimensions and connections of Movitec H(S)I 2 with V18 motor[9)]

Dimensions [mm]

| Number of stages | Motor | E1 | E2 | F1 | F2 | S1 |
|---|---|---|---|---|---|---|
| 2 | V18 | 138 | 109 | 502 | 289 | 236,5 |
| 3 | V18 | 138 | 109 | 523 | 310 | 257,5 |
| 4 | V18 | 138 | 109 | 545 | 332 | 279,5 |
| 5 | V18 | 157 | 133 | 620 | 363 | 310,5 |
| 6 | V18 | 157 | 133 | 642 | 385 | 332,5 |
| 7 | V18 | 157 | 133 | 663 | 406 | 353,5 |
| 8 | V18 | 157 | 133 | 685 | 428 | 375,5 |
| 9 | V18 | 180 | 145 | 706 | 449 | 396,5 |
| 10 | V18 | 180 | 145 | 734 | 481 | 426,5 |
| 11 | V18 | 180 | 145 | 755 | 502 | 447,5 |
| 12 | V18 | 180 | 145 | 504 | 524 | 469,5 |
| 14 | V18 | 180 | 145 | 849 | 567 | 512,5 |

9) Optional: connection height 160 mm

**Movitec H(S)I 4B, n = 2900 rpm**

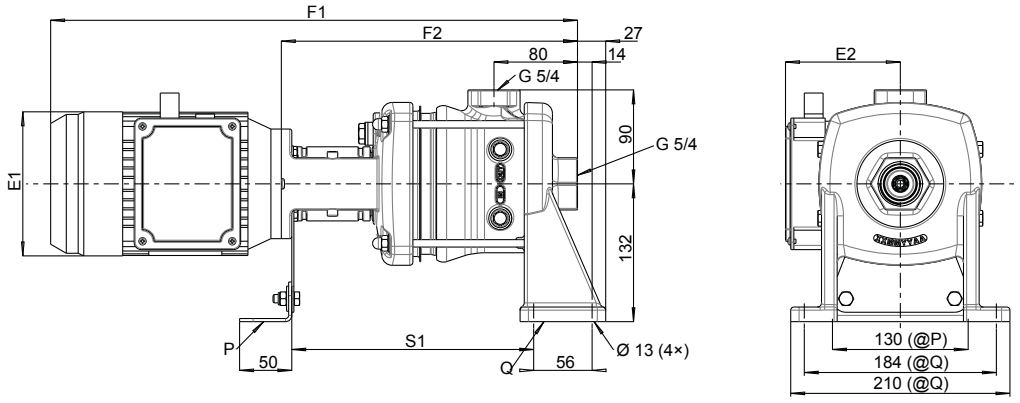


**Fig. 8:** Dimensions and connections of Movitec H(S)I 4 with V18 motor[10)]

Dimensions [mm]

| Number of stages | Motor | E1 | E2 | F1 | F2 | S1 |
|---|---|---|---|---|---|---|
| 2 | V18 | 138 | 109 | 502 | 289 | 236,5 |
| 3 | V18 | 138 | 109 | 523 | 310 | 257,5 |
| 4 | V18 | 138 | 109 | 545 | 332 | 279,5 |
| 5 | V18 | 157 | 133 | 620 | 363 | 310,5 |
| 6 | V18 | 157 | 133 | 642 | 385 | 332,5 |
| 7 | V18 | 157 | 133 | 663 | 406 | 353,5 |
| 8 | V18 | 180 | 145 | 691 | 438 | 383,5 |
| 9 | V18 | 180 | 145 | 712 | 459 | 404,5 |
| 10 | V18 | 180 | 145 | 734 | 481 | 426,5 |
| 11 | V18 | 180 | 145 | 784 | 502 | 447,5 |
| 12 | V18 | 180 | 145 | 806 | 524 | 469,5 |
| 14 | V18 | 180 | 145 | 849 | 567 | 512,5 |

10) Optional: connection height 160 mm

## Movitec H(S)I 4B, n = 3500 rpm

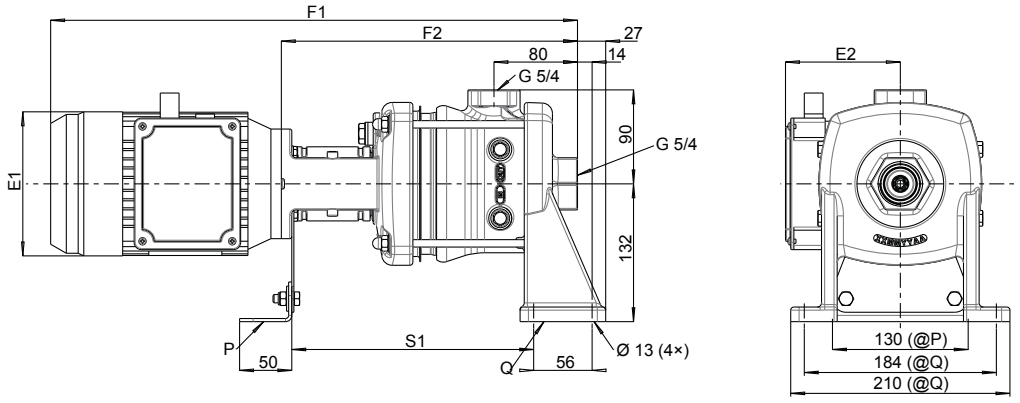


**Fig. 9:** Dimensions and connections of Movitec H(S)I 4 with V18 motor[11)]

Dimensions [mm]

| Number of stages | Motor | E1 | E2 | F1 | F2 | S1 |
|---|---|---|---|---|---|---|
| 2 | V18 | 138 | 109 | 502 | 289 | 236,5 |
| 3 | V18 | 157 | 133 | 577 | 320 | 267,5 |
| 4 | V18 | 157 | 133 | 599 | 342 | 289,5 |
| 5 | V18 | 180 | 145 | 626 | 373 | 318,5 |
| 6 | V18 | 180 | 145 | 648 | 395 | 340,5 |
| 7 | V18 | 180 | 145 | 698 | 416 | 361,5 |
| 8 | V18 | 180 | 145 | 720 | 438 | 383,5 |
| 9 | V18 | 200 | 155 | 783 | 459 | 404,5 |
| 10 | V18 | 200 | 155 | 805 | 491 | 436,5 |
| 11 | V18 | 200 | 155 | 826 | 512 | 457,5 |
| 12 | V18 | 223 | 166 | 848 | 534 | 479,5 |
| 14 | V18 | 223 | 166 | 900 | 577 | 522,5 |

11) Optional: connection height 160 mm

**Movitec H(S)I 6B, n = 2900 rpm**

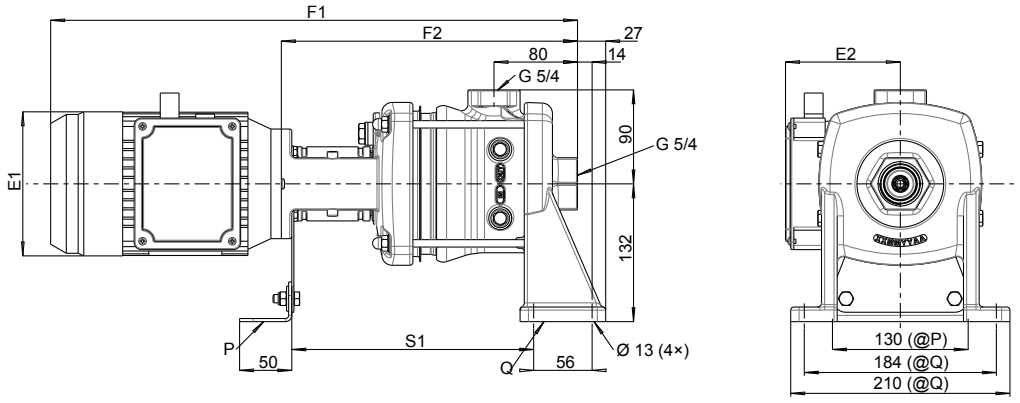


**Fig. 10:** Dimensions and connections of Movitec H(S)I 6 with V18 motor[12)]

Dimensions [mm]

| Number of stages | Motor | E1 | E2 | F1 | F2 | S1 |
|---|---|---|---|---|---|---|
| 2 | V18 | 138 | 109 | 509 | 296 | 243,5 |
| 3 | V18 | 157 | 133 | 588 | 331 | 278,5 |
| 4 | V18 | 157 | 133 | 613 | 356 | 303,5 |
| 5 | V18 | 157 | 133 | 638 | 381 | 328,5 |
| 6 | V18 | 180 | 145 | 669 | 416 | 361,5 |
| 7 | V18 | 180 | 145 | 694 | 441 | 386,5 |
| 8 | V18 | 180 | 145 | 748 | 466 | 411,5 |
| 9 | V18 | 180 | 145 | 773 | 491 | 436,5 |
| 10 | V18 | 180 | 145 | 798 | 516 | 461,5 |
| 11 | V18 | 200 | 155 | 865 | 551 | 496,5 |
| 12 | V18 | 200 | 155 | 890 | 576 | 521,5 |
| 14 | V18 | 200 | 155 | 940 | 626 | 571,5 |

12) Optional: connection height 160 mm

**Movitec H(S)I 6B, n = 3500 rpm**

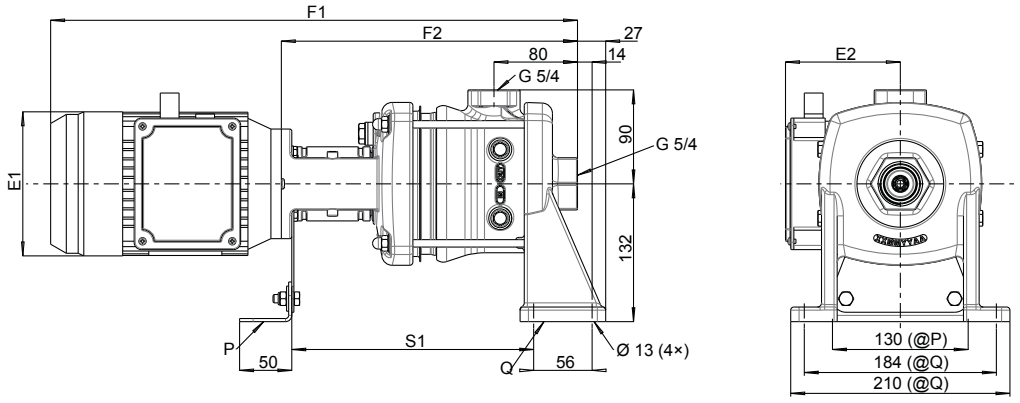


**Fig. 11:** Dimensions and connections of Movitec H(S)I 6 with V18 motor[13)]

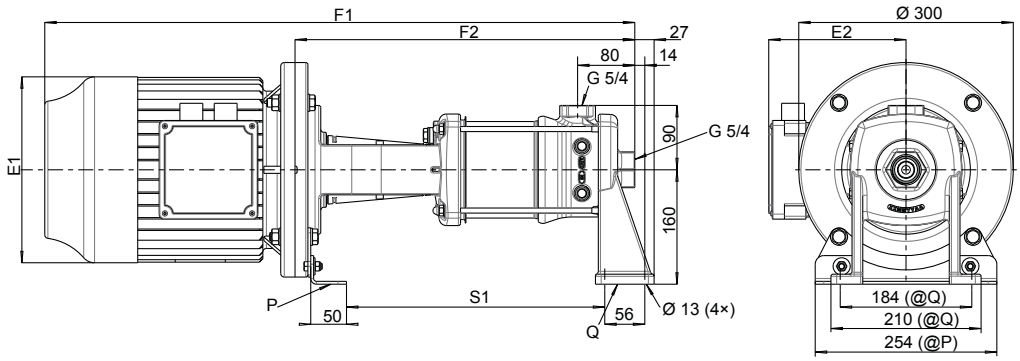


**Fig. 12:** Dimensions and connections of Movitec H(S)I 6 with V1 motor

Dimensions [mm]

| Number of stages | Motor | E1 | E2 | F1 | F2 | S1 |
|---|---|---|---|---|---|---|
| 2 | V18 | 157 | 133 | 563 | 306 | 253,5 |
| 3 | V18 | 157 | 133 | 588 | 331 | 278,5 |
| 4 | V18 | 180 | 145 | 619 | 366 | 311,5 |
| 5 | V18 | 180 | 145 | 673 | 391 | 336,5 |
| 6 | V18 | 180 | 145 | 698 | 416 | 361,5 |
| 7 | V18 | 200 | 155 | 765 | 451 | 396,5 |
| 8 | V18 | 200 | 155 | 790 | 476 | 421,5 |
| 9 | V18 | 223 | 166 | 824 | 501 | 446,5 |
| 10 | V18 | 223 | 166 | 849 | 526 | 471,5 |
| 11 | V18 | 223 | 166 | 874 | 551 | 496,5 |
| 12 | V1 | 260 | 190 | 998 | 652 | 552 |
| 14 | V1 | 260 | 190 | 1048 | 702 | 602 |

13) Optional: connection height 160 mm

**Movitec H(S)I 10B, n = 1450 rpm**

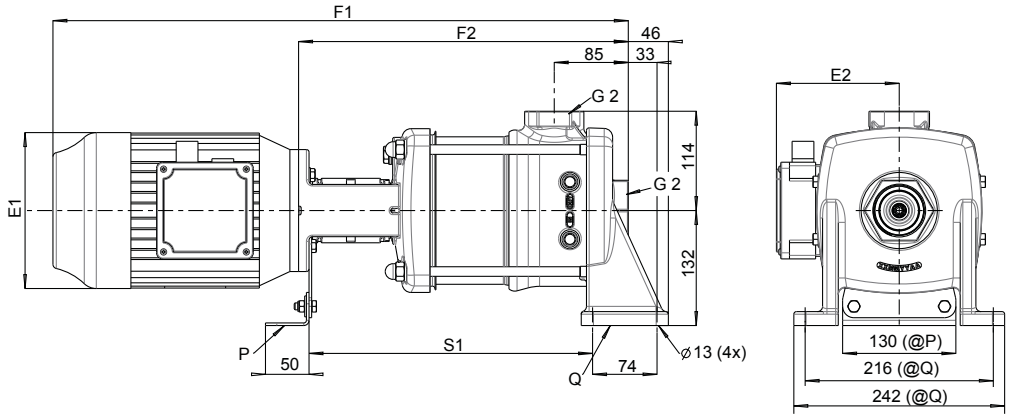


**Fig. 13:** Dimensions and connections of Movitec H(S)I 10 with V18 motor[14)]

Dimensions [mm]

| Number of stages | Motor | E1 | E2 | F1 | F2 | S1 |
|---|---|---|---|---|---|---|
| 1 | V18 | 157 | 112 | 597 | 351 | 280,5 |
| 2 | V18 | 157 | 112 | 597 | 351 | 280,5 |
| 3 | V18 | 157 | 112 | 623 | 377 | 306,5 |
| 4 | V18 | 157 | 112 | 650 | 404 | 333,5 |
| 5 | V18 | 157 | 112 | 676 | 430 | 359,5 |
| 6 | V18 | 157 | 112 | 703 | 457 | 386,5 |
| 7 | V18 | 157 | 112 | 729 | 483 | 412,5 |
| 8 | V18 | 157 | 112 | 755 | 510 | 439,5 |

14) Optional: connection height 160 mm

### Movitec H(S)I 10B, n = 1750 rpm

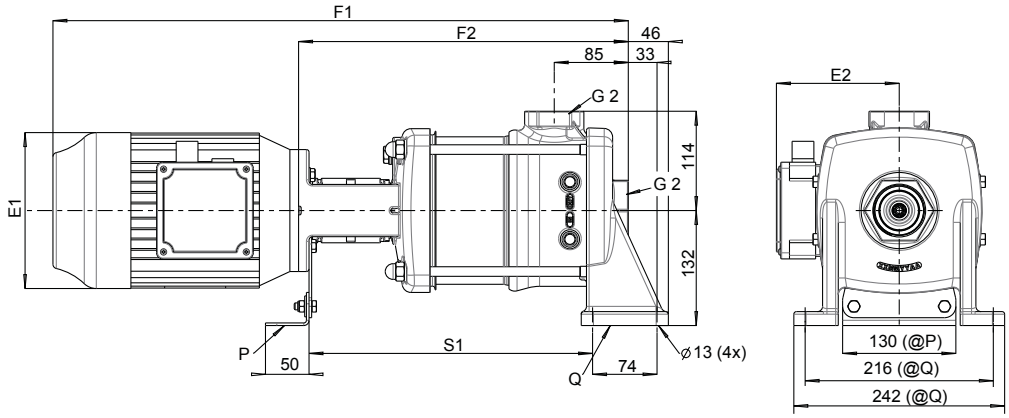


**Fig. 14:** Dimensions and connections of Movitec H(S)I 10 with V18 motor[15)]

Dimensions [mm]

| Number of stages | Motor | E1 | E2 | F1 | F2 | S1 |
|---|---|---|---|---|---|---|
| 1 | V18 | 157 | 112 | 597 | 351 | 280,5 |
| 2 | V18 | 157 | 112 | 597 | 361 | 290,5 |
| 3 | V18 | 157 | 112 | 623 | 377 | 306,5 |
| 4 | V18 | 157 | 112 | 650 | 404 | 333,5 |
| 5 | V18 | 157 | 112 | 676 | 430 | 359,5 |
| 6 | V18 | 157 | 112 | 703 | 457 | 386,5 |
| 7 | V18 | 157 | 112 | 729 | 483 | 412,5 |
| 8 | V18 | 157 | 112 | 783 | 510 | 439,5 |

15) Optional: connection height 160 mm

**Movitec H(S)I 10B, n = 2900 rpm**

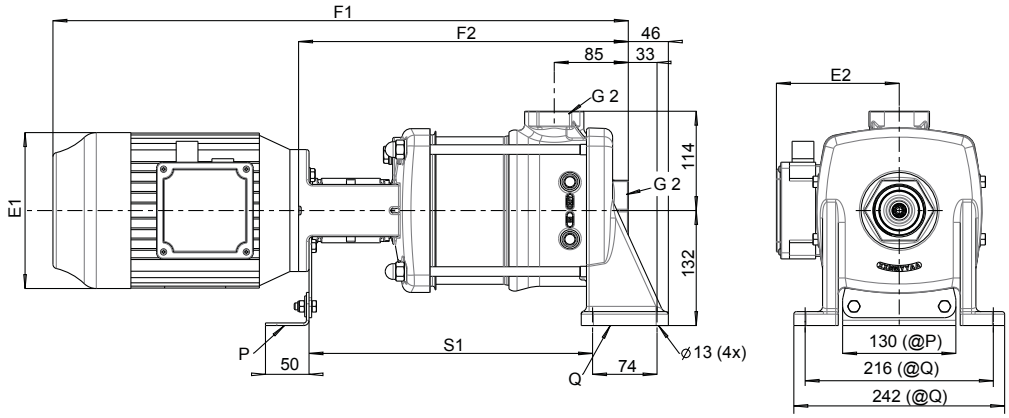


**Fig. 15:** Dimensions and connections of Movitec H(S)I 10 with V18 motor[16)]

Dimensions [mm]

| Number of stages | Motor | E1 | E2 | F1 | F2 | S1 |
|---|---|---|---|---|---|---|
| 1 | V18 | 157 | 133 | 626 | 351 | 280,5 |
| 2 | V18 | 157 | 133 | 651 | 376 | 305,5 |
| 3 | V18 | 157 | 133 | 677 | 402 | 331,5 |
| 4 | V18 | 180 | 145 | 709 | 439 | 366,5 |
| 5 | V18 | 180 | 145 | 750 | 465 | 392,5 |
| 6 | V18 | 180 | 145 | 777 | 492 | 419,5 |
| 7 | V18 | 200 | 155 | 858 | 528 | 455,5 |
| 8 | V18 | 200 | 155 | 885 | 555 | 482,5 |

16) Optional: connection height 160 mm

**Movitec H(S)I 10B, n = 3500 rpm**

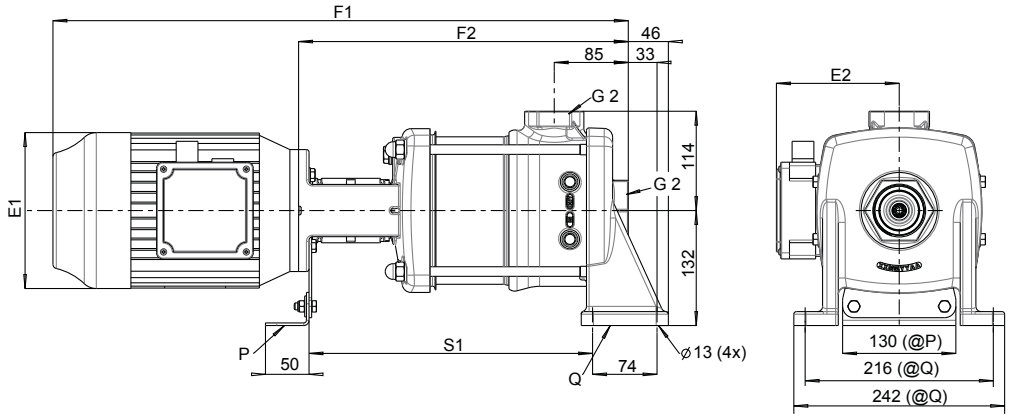


**Fig. 16:** Dimensions and connections of Movitec H(S)I 10 with V18 motor[17)]

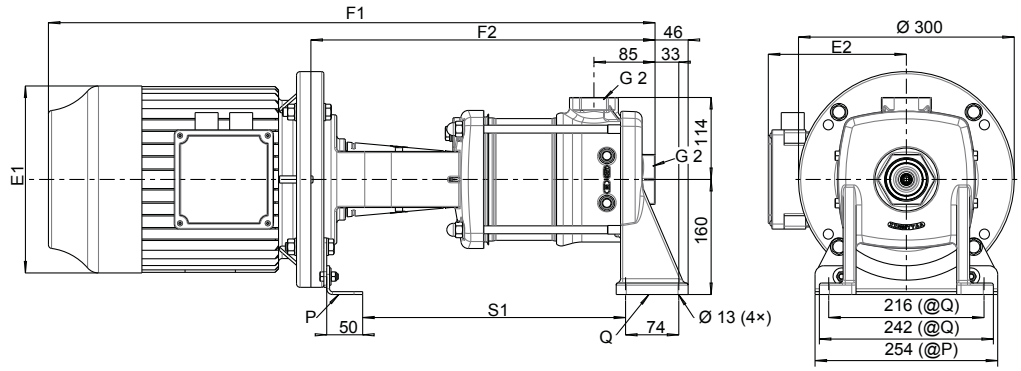


**Fig. 17:** Dimensions and connections of Movitec H(S)I 10 with V1 motor

Dimensions [mm]

| Number of stages | Motor | E1 | E2 | F1 | F2 | S1 |
|---|---|---|---|---|---|---|
| 1 | V18 | 157 | 133 | 626 | 351 | 280,5 |
| 2 | V18 | 180 | 145 | 656 | 386 | 313,5 |
| 3 | V18 | 180 | 145 | 697 | 412 | 339,5 |
| 4 | V18 | 200 | 155 | 779 | 449 | 376,5 |
| 5 | V18 | 223 | 166 | 815 | 475 | 402,5 |
| 6 | V18 | 223 | 166 | 842 | 502 | 429,5 |
| 7 | V1 | 260 | 190 | 973 | 608 | 483,5 |
| 8 | V1 | 260 | 190 | 999 | 634 | 509,5 |

17) Optional: connection height 160 mm up to a maximum of 7 stages

**Movitec H(S)I 15B, n = 1450 rpm**

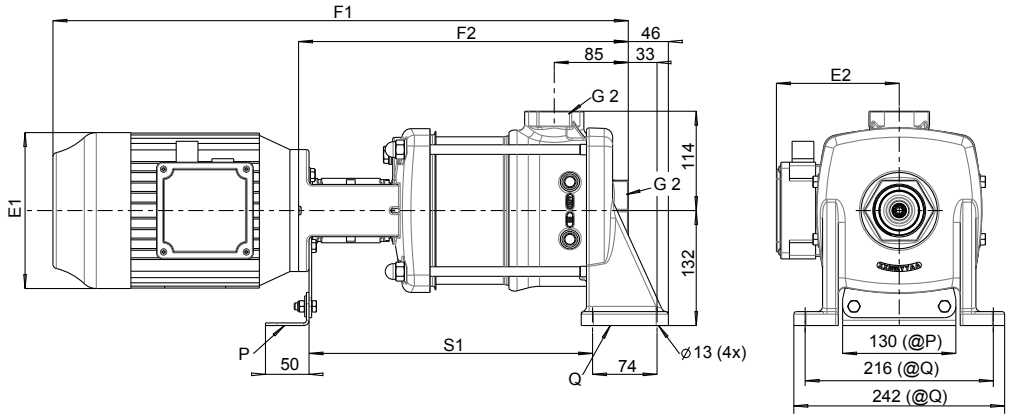


**Fig. 18:** Dimensions and connections of Movitec H(S)I 15 with V18 motor[18)]

Dimensions [mm]

| Number of stages | Motor | E1 | E2 | F1 | F2 | S1 |
|---|---|---|---|---|---|---|
| 1 | V18 | 157 | 112 | 597 | 351 | 280,5 |
| 2 | V18 | 157 | 112 | 597 | 351 | 280,5 |
| 3 | V18 | 157 | 112 | 623 | 377 | 306,5 |
| 4 | V18 | 157 | 112 | 650 | 404 | 333,5 |
| 5 | V18 | 157 | 112 | 676 | 430 | 359,5 |
| 6 | V18 | 157 | 112 | 732 | 457 | 386,5 |
| 7 | V18 | 180 | 145 | 763 | 493 | 420,5 |
| 8 | V18 | 180 | 145 | 790 | 520 | 447,5 |

18) Optional: connection height 160 mm

### Movitec H(S)I 15B, n = 1750 rpm

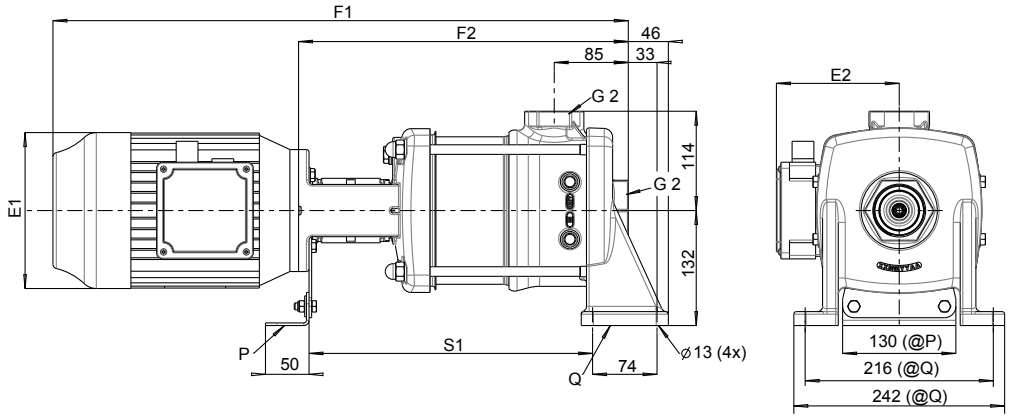


**Fig. 19:** Dimensions and connections of Movitec H(S)I 15 with V18 motor[19)]

Dimensions [mm]

| Number of stages | Motor | E1 | E2 | F1 | F2 | S1 |
|---|---|---|---|---|---|---|
| 1 | V18 | 157 | 112 | 597 | 351 | 280,5 |
| 2 | V18 | 157 | 112 | 597 | 351 | 280,5 |
| 3 | V18 | 157 | 112 | 623 | 377 | 306,5 |
| 4 | V18 | 157 | 112 | 679 | 404 | 333,5 |
| 5 | V18 | 180 | 145 | 710 | 440 | 367,5 |
| 6 | V18 | 180 | 145 | 737 | 467 | 394,5 |
| 7 | V18 | 180 | 145 | 778 | 493 | 420,5 |
| 8 | V18 | 180 | 145 | 805 | 520 | 447,5 |

19) Optional: connection height 160 mm

**Movitec H(S)I 15B, n = 2900 rpm**

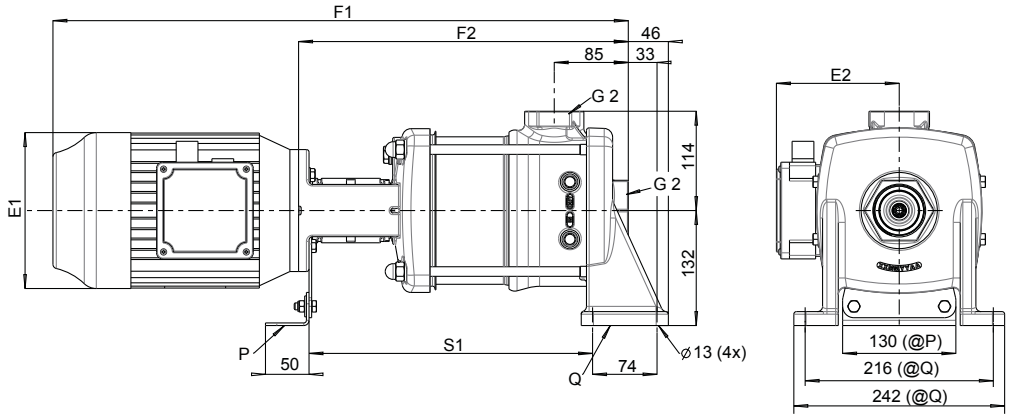


**Fig. 20:** Dimensions and connections of Movitec H(S)I 15 with V18 motor[20)]

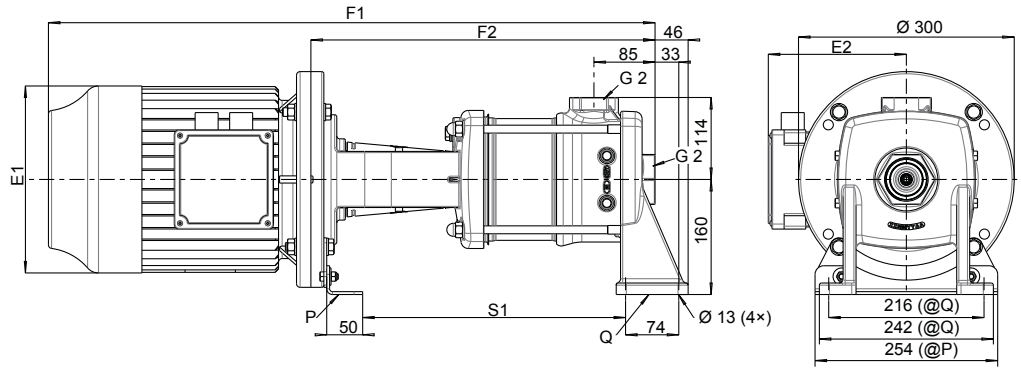


**Fig. 21:** Dimensions and connections of Movitec H(S)I 15 with V1 motor

Dimensions [mm]

| Number of stages | Motor | E1 | E2 | F1 | F2 | S1 |
|---|---|---|---|---|---|---|
| 1 | V18 | 157 | 133 | 626 | 351 | 280,5 |
| 2 | V18 | 180 | 145 | 646 | 361 | 288,5 |
| 3 | V18 | 200 | 155 | 727 | 397 | 324,5 |
| 4 | V18 | 223 | 166 | 764 | 424 | 351,5 |
| 5 | V1 | 260 | 190 | 895 | 530 | 405,5 |
| 6 | V1 | 260 | 190 | 921 | 556 | 431,5 |
| 7 | V1 | 260 | 190 | 948 | 583 | 458,5 |
| 8 | V1 | 260 | 190 | 974 | 609 | 484,5 |

20) Optional: connection height 160 mm up to a maximum of 4 stages

### Movitec H(S)I 15B, n = 3500 rpm

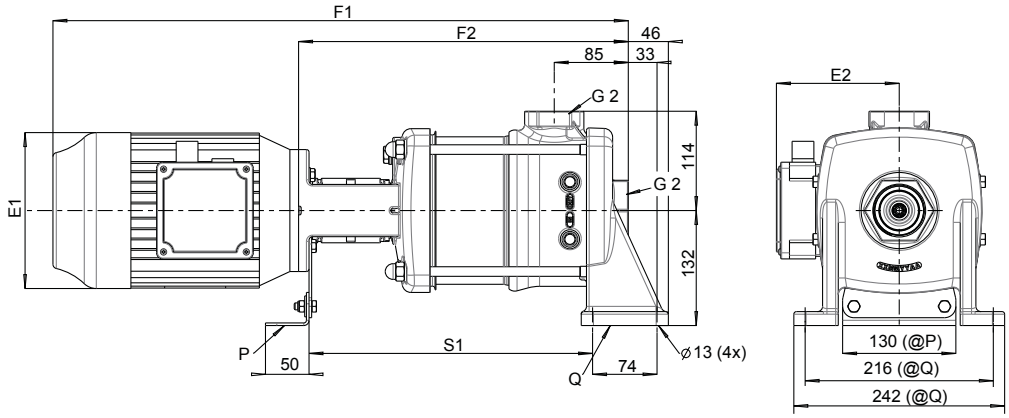


**Fig. 22:** Dimensions and connections of Movitec H(S)I 15 with V18 motor[21)]

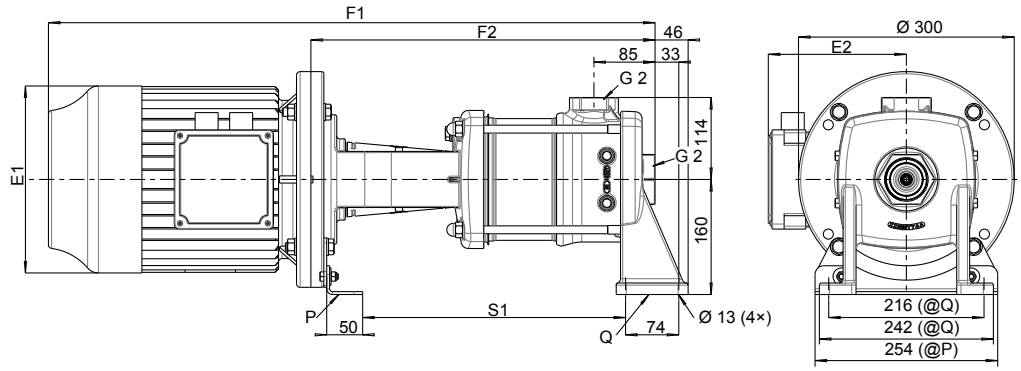


**Fig. 23:** Dimensions and connections of Movitec H(S)I 15 with V1 motor

Dimensions [mm]

| Number of stages | Motor | E1 | E2 | F1 | F2 | S1 |
|---|---|---|---|---|---|---|
| 1 | V18 | 185 | 145 | 646 | 361 | 288,5 |
| 2 | V18 | 200 | 155 | 701 | 371 | 298,5 |
| 3 | V1 | 260 | 190 | 842 | 477 | 352,5 |
| 4 | V1 | 260 | 190 | 868 | 503 | 378,5 |
| 5 | V1 | 260 | 190 | 895 | 530 | 405,5 |

21) Optional: connection height 160 mm up to a maximum of 2 stages

## General assembly drawing with list of components

### Movitec H(S)I

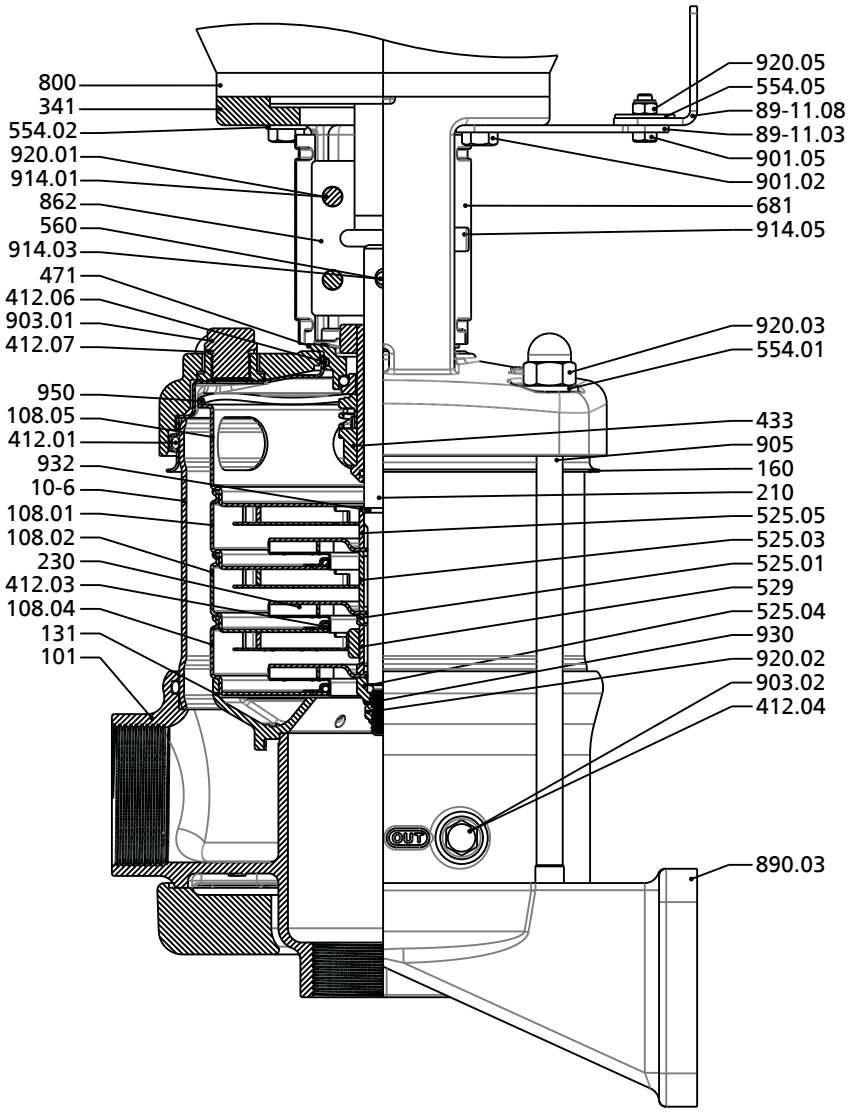


**Fig. 24:** General assembly drawing

List of components

| Part No. | Description | Part No. | Description |
|---|---|---|---|
| 10-6 | Pump shroud | 560 | Pin |
| 101 | Pump casing | 681 | Coupling guard |
| 108.01/.02/.04/.05 | Stage casing | 800 | Motor |
| 131 | Inlet ring | 862 | Coupling shell |
| 160 | Cover | 89-11.03/.08 | Retaining bracket |
| 210 | Shaft | 890.03 | Baseplate |
| 230 | Impeller | 901.02/.05 | Hexagon head bolt |
| 341 | Drive lantern | 903.01/.02 | Screw plug |
| 412.01/.03/.04/.06/.07 | O-ring | 905 | Tie bolt |
| 433 | Mechanical seal | 914.01/.03/.05 | Hexagon socket head cap screw |
| 471 | Seal cover | 920.01/.02/.03/.05 | Nut |
| 525.01/.03/.04/.05 | Spacer sleeve | 930 | Safety device |
| 529 | Bearing sleeve | 932 | Circlip |
| 554.01/.02/.05 | Washer | 950 | Spring |

13/03/2018

1798.55/02-EN

**KSB Aktiengesellschaft**
Johann-Klein-Straße 9 • 67227 Frankenthal (Germany)
Tel. +49 6233 86-0
www.ksb.com